Safety light Curtains

- Control unit Type 2
- Single beam Photoelectric Sensors Type 2 and Type 4
- Safety light Curtains Type 2
- Safety light Curtains Type 4

Nominal sensing distance

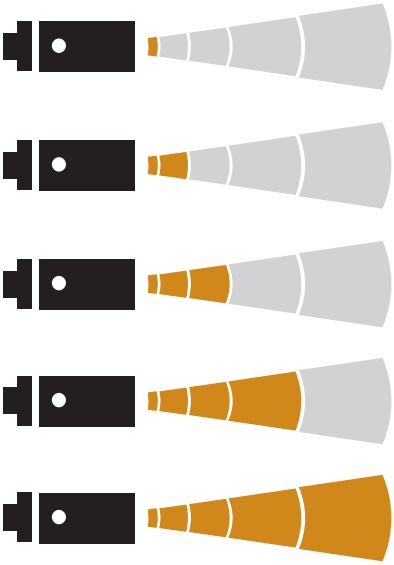

From 0 to 6 mm

From 0 to 12 mm

From 0 to 20 mm

From 0 to 30 mm

From 0 to 60 mm

Type of detection

	Finger protection
	Hand protection
	Presence control
	Body protection

Safety light Curtains
Basic theory

Safety light Curtains: characteristic elements

Light Curtains are electro sensitive devices using one or more light beams, emitted by an Emitter and received by a Receiver, to create an intangible controlled area. Fundamental characteristics are:

Safety type

- Defines the self-monitoring and safety principles contained in the device
- It must be chosen as a function of the risk level characterising the machine

When the chosen safety device is a photo-electric barrier (AOPD Active Optoelectronic Protective Device), it shall necessary belong to TYPE 2 or TYPE 4 as established by the International Standard IEC 61496 1-2.

Why “Type” and not “Category”?

When talking about light curtains and laser scanners, we normally refer to their “safety type”; while for all other safety devices the term of choice is “safety category”. This distinction is due to the International Standard IEC 61496, in which the term “type” is introduced to determine the safety level of optoelectronics protective equipment. In practice, “type” adds some optical requirements to the requirements which define categories for non-optical safety devices. Therefore, a Type 2 light curtain is a light curtain which complies with the requirements for category 2 safety electronics and furthermore whose beams have certain characteristics, among which a given aperture angle, immunity to light interference and so on. The same applies for Type 4 light curtains and Type 3 laser scanners.

Resolution

Minimum size of an object that, placed into the controlled area, will obscure the controlled zone and hence stop the hazardous movement of the machine. Single beam light barriers: their resolution R is the same as the diameter of the lens.

R = D

Multibeam light curtains: their resolution R is the same as the sum of the lens diameter + the distance between two adjacent lenses.

R = P + D

R = P + D	R = D
R : resolution	R : resolution
D : beam pitch	D : lens diameter
P : lenses	A : optical axis

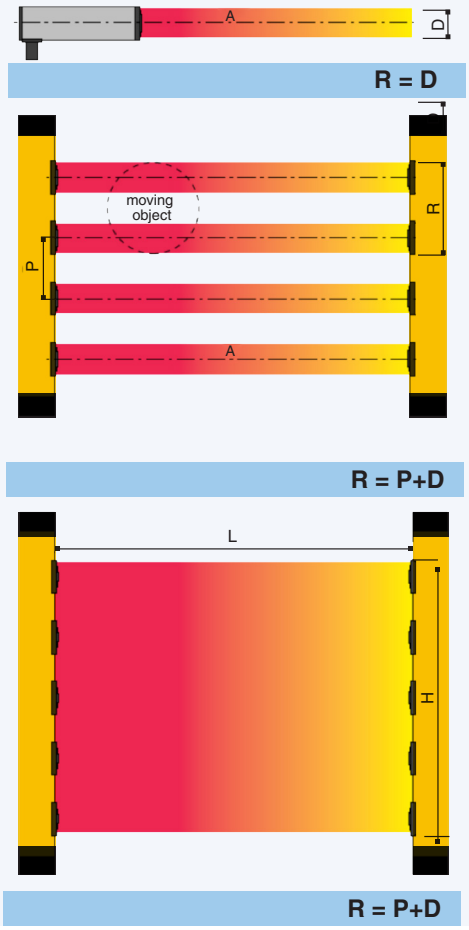

Protected height

This is the height controlled by the light curtain. If it is positioned horizontally, this value shows the depth of the protected zone.

L :	protected area lengh
H :	protected area height

Range

This is the maximum working distance that may exist between the Emitter and the Receiver. When deflection mirrors are used, it is necessary to take into account the attenuation factor introduced by each of them, which it is about 15%.

Response Time

This is the time it takes for the light curtain to transmit the alarm signal from the time the protected zone is interrupted.

Advantages of light Curtains

- Effective protection in the event of fatigue or distraction of the operator.
- Increase in the productive capacity of the machine as the light curtain does not require the manual handling of physical guards or waiting for them to open.
- Faster machine loading/unloading operations.
- Reduced times of approach to the working areas.
- Elimination of the risk of tampering since any irregular intervention on the light curtain stops the machine.
- Simple and quick installation, with greater flexibility of adjustment on the machine, even in the case of subsequent repositioning.
- Possibility to build up large sized protections, either linear or along a perimeter, on several sides, at greatly reduced costs.
- Facilitated and fast maintenance of the machine, as there is no need to remove physical guards, such as grids, gates, etc.
- Improved appearance and ergonomic effectiveness of the machine.

Condition of use

For the photoelectric safety protections to be effective, it is necessary to verify that:

- It must be possible to electrically interface them to the control unit of the machine.
- The time taken to reach the hazardous point must be greater than the time necessary to stop the hazardous movement.
- The machine must not create secondary dangers due to the projection or fall from above of materials. If this danger exists, additional protections of a mechanical nature have to be provided.
- The minimum size of the object to be detected must be equal to or greater than the chosen light curtain resolution.

Selection criteria of a safety light curtain

- Definition of the zone to be protected.
- Definition of the parts of the body to be detected:
  - fingers or hands;
  - approaching body of a person;
  - presence of a person in a hazardous area.
- Definition of the safety distance between the light curtain and the hazardous point.
- Definition of the safety category Level/Type to be adopted according to ISO 13849-1, IEC 62061, IEC 61496.

Definition of the zone to be protected

- Take into account the configuration of the zone:
- shape and dimensions: width and height of the access area;
- positions of hazardous parts;
- possible access points.

The light curtain must be positioned so as to prevent the access to the dangerous area from above, from below, and from the sides without having.

intercepted the field protected by the light curtain.

It is possible to install one or more deflection mirrors in order to protect areas with access from several sides. This results in a considerable reduction in costs, as this solution eliminates the need of installing many separate light curtains.

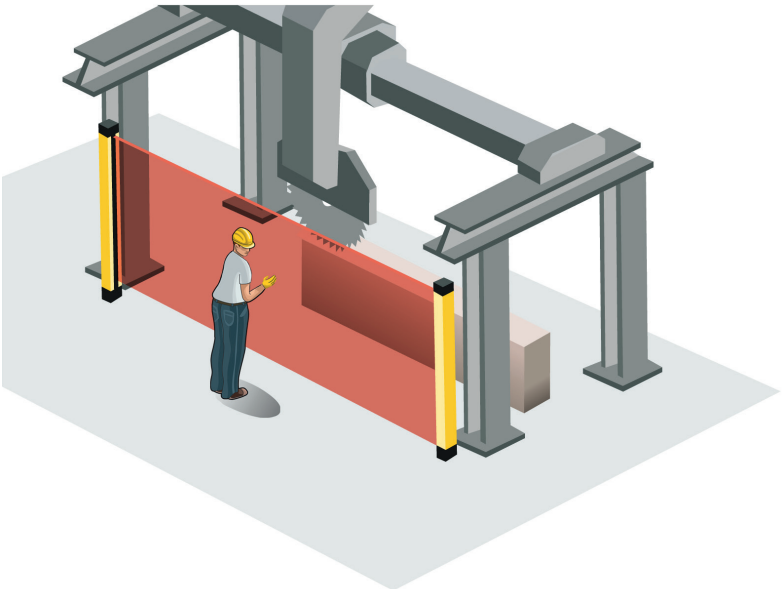

ЭйБиЭн www.abn.by

Definition of type of detection

	detection	characteristics	advantage
	finger or hand	Detection necessary when the operator must work close to the danger. Barrier resolution must be between 14 mm and 40 mm.	Possibility to lower the dimensions by reducing at the top the space between the protection and the dangerous zone. Short time for machine charging and discharging. Less operator fatigue, more productivity.
	body (use as trip device)	Ideal detection for access control and protections of several sides, also for long scanning distances. The barrier must be placed at least at 850 mm from the danger. Barrier normally composed by 2, 3, 4 beams.	Protection costs reduced by the restricted number of beams. Possibility to protect zones with big dimensions by using deflection mirrors. see note below
	presence in a dangerous zone	Detection realized by positioning the light curtains horizontally to control continuously the presence of an object in a definite zone. The light curtains resolution depends on the height of the detection plane, anyway it cannot be higher than 116 mm.	Possibility to control zones not visible from where the machine's push button controls are located.

Note

Accidental start-up of the machine shall not be possible when anyone crosses the sensitive area and stays undetected in the dangerous area.

Suitable ways of eliminating this type of risk include the following:

- Use of start / restart-interlock function positioning the command so that the dangerous area is in full view and so that the command cannot be reached by anyone from inside the dangerous area. The Restart command has to be safe in compliance with IEC 61496-1
- Use of additional presence sensing detectors for the detection of the operator inside dangerous area
- Use of obstacles preventing the operator from remaining undetected in the space between the sensing zone of the protective device and the dangerous area.

Determination of the safety distance

The effectiveness of the protection depends greatly on the correct positioning of the light Curtain with respect to the danger. The light Curtain must be located at a distance greater than or equal to the minimum safety distance S, so that reaching the dangerous point will be possible only when the dangerous action of the machine has been stopped.

The light Curtain must be positioned so that:

- It is impossible to reach the dangerous point without going through the zone controlled by the light curtain
- A person cannot be present in the dangerous zone without his/her presence being detected. To this end, it might be necessary to resort to additional safety devices (i.e..: photoelectric light curtains arranged horizontally).

European Standard EN ISO 13855 provides the elements for the determination of the safety distance.
If the machine in object is governed by a specific C type Standard, it shall be taken into two account.

If the distance S determined in this manner is too big, it is necessary:

- a) to reduce the total stopping time of the machine,
- b) to improve the detection capability (resolution) of the light curtain.

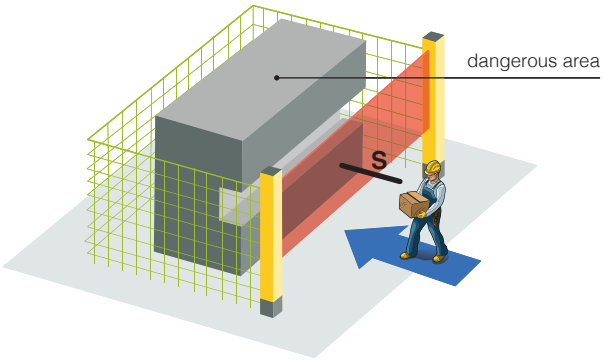

One-side protection

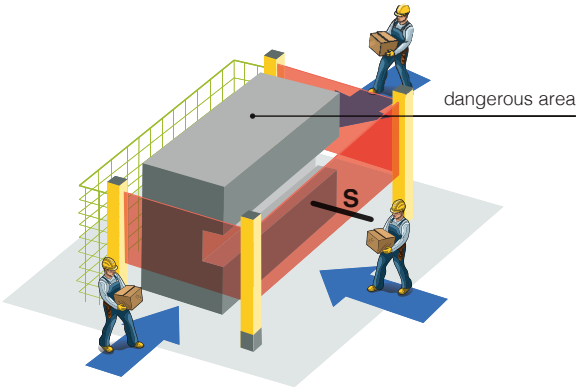

Three-side protection using deflection mirrors

General formula for the determination of the minimum safety distance

S = K x T + C	
S	minimum safety distance between the protection and hazardous point, expressed in mm
K	speed of approach of the body or parts of the body, expressed in mm / sec
T	total stopping time of the machine, consisting of: **t1** reaction time of the protective device in seconds **t2** reaction time of the machine in seconds, until it stops the hazardous action.
C	additional distance in mm

C takes into account:
Possible intrusion of parts of the body in the sensitive area before they are detected. For example:

- C = 8 x (d-14) if D (light Curtain resolution) ≤ 40 mm.
- C = 850 if D (light curtain resolution) > 40 mm and for 2, 3, 4 beams Curtains.
- C = 1,200 - (0,4 x H) for horizontal light Curtains.

The dangerous point can be reached by leaning over the upper edge of the sensitive area of a vertical light Curtain.
In this case C, called “CRO” is obtained from the following Table 2 of EN ISO 13855 / EN 999.

ЭйБиЭн www.abn.by

height of Hazard zone “a” (mm)	height “b” of upper edge of area protected by photoelectric Curtain (mm)											
	900	1,000	1,100	1,200	1,300	1,400	1,600	1,800	2,000	2,200	2,400	2,600
	alternative distance CR0											
2,600	0											
2,500	400		350	300					250	150	100	-
2,400	550			500	450		400		300	250	100	-
2,200	510	750		700	650		600	550	400	250	-	-
2,000	950		850		800	750	700	550	400	-	-	-
1,800	1,100		950		850	800	750	550	-	-	-	-
1,600	1,150		1,100		900	800	750	450	-	-	-	-
1,400	1,200		1,100	1,000	900	850	650	-	-	-	-	-
1,200	1,200		1,100	1,000	850	800	-	-	-	-	-	-
1,000	1,200	1,150	1,050	960	750	700	-	-	-	-	-	-
800	1,150	1,050	950	800	500	450	-	-	-	-	-	-
600	1,050	950	750	550	-	-	-	-	-	-	-	-
400	900	700	-	-	-	-	-	-	-	-	-	-
200	600	-	-	-	-	-	-	-	-	-	-	-
0	-	-	-	-	-	-	-	-	-	-	-	-

(Tab.2 ISO 13855/EN 999)

- Interpolation is not allowed.
- If distances a, b or CRO fall between values listed in the table, use the higher.
- CRO (reaching over) calculated using Table 2 of EN ISO 13855 / EN 999 must be compared to C as conventionally calculate (see paragraph 1). Always select the higher value.

For combined mechanical and electrosensitive protections (as shown), where it would be possible to lean against the mechanical protection and bypass the light curtain, for the calculation of the parameter C should use the Table 1 (for low risk applications) or the Table 2 (for high-risk applications) of ISO 13857:2007 (formerly EN 294) in place of the table on the previous page. In this catalog the two tables of ISO 13857:2007 (formerly EN 294). Safety distances to prevent danger zones being reached by upper and lower limbs - are not mentioned.

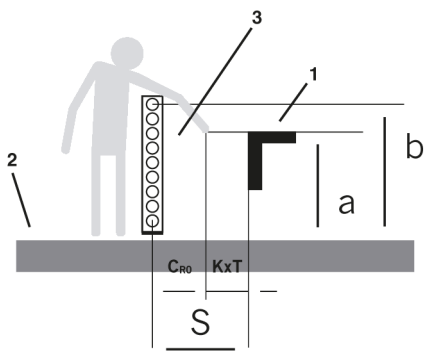

1 Dangerous area
2 Reference plane
3 Light Curtain

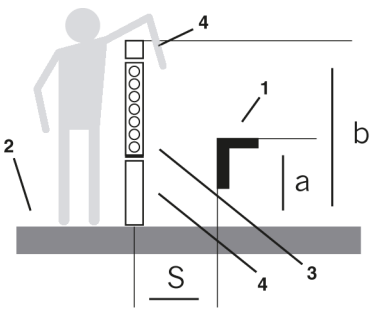

1 Dangerous area
2 Reference plane
3 Light Curtain
4 Mechanical protection

Direction of approach perpendicular to the protected plane with α = 90° (± 5°)

Light Curtains with resolution for the detection of hands and fingers. Light Curtains resolution (d) ≤ 40 mm — **D ≤ 40**

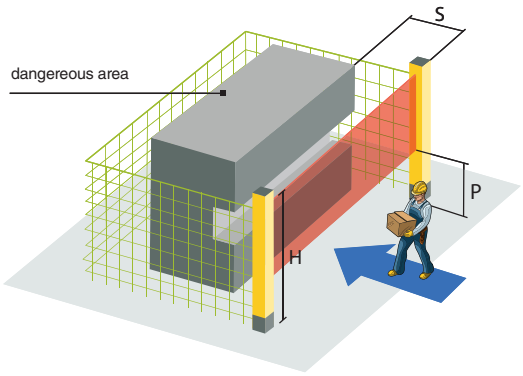

S = 2,000 xT + 8x (d-14)

if the formula as a result:

S > 500

you can use K = 1,600

S = 1,600 xT + 8x (d-14)

- The distance S must not be lower than 100 mm
- If the distance S is greater than 500 mm it is possible to re-calculate the distance using K =1,600
- In these circumstances, the distance must in no case be lower than 500 mm

Light curtains with a resolution for detection of arms and legs. 40 mm < Light curtains resolution (d) ≤70 mm — **40 < D ≤ 70**

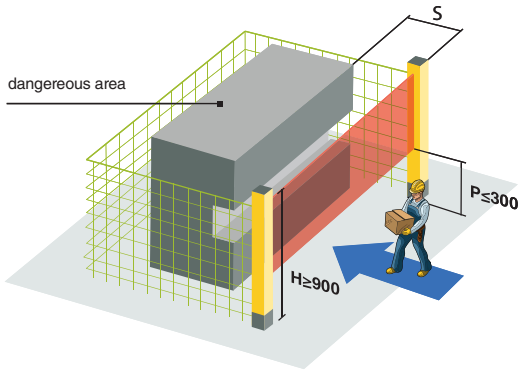

S= 1,600 xT + 850

- The height of the lowest beam must be equal to or lower than 300 mm
- The height of the uppest beam must be equal to or higher than 900 mm

Light grids for body detection through access control. Light Curtains resolution (d) >70 mm — **D > 70**

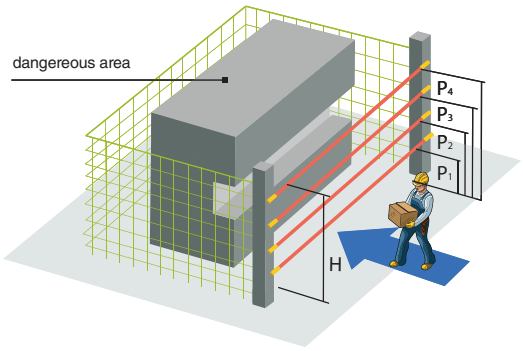

S= 1,600 xT + 850

- Number and height of the beams
- N. Recommended height

2,400 - 900 mm
3,300 - 700 - 1,100 mm
4,300 - 600 - 900 - 1,200 mm

ЭйБиЭн www.abn.by

Direction of approach parallel to the protected plane with α = 0° (± 5°)

Horizontal light curtains for presence control in a dangerous area

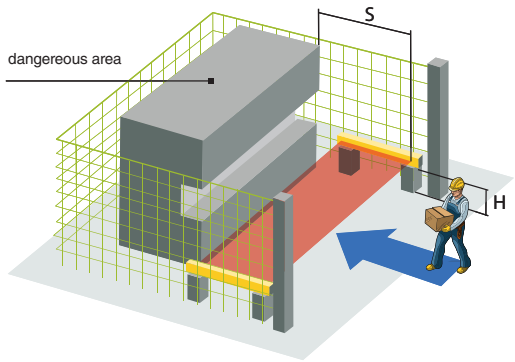

S=1,600 xT + (1,200 - 0.4 xH)

- C = 1,200 - (0.4 x H) must be equal to or greater than 850 mm.
- The maximum height allowed is: Hmax = 1,000 mm.
- The height H depends on the resolution d of the light curtains and is determined through the following formula: H = 15 x (d - 50).
- This formula can also be used to determine the maximum resolution that can be used at the different heights d = H / 15 + 50
- For example, the maximum resolution limits will be:
for H = 1,000 mm d = 116 mm
for H = 0 mm d = 50 mm
- If H is greater than 300 mm, at the stage of risk assessment it becomes necessary to take into consideration the possibility of access from beneath the beams.

Direction of approach angled to the protected plane with 5°< α < 85°

Slanted light Curtains to detect hands and arms and for presence control in the dangerous area.

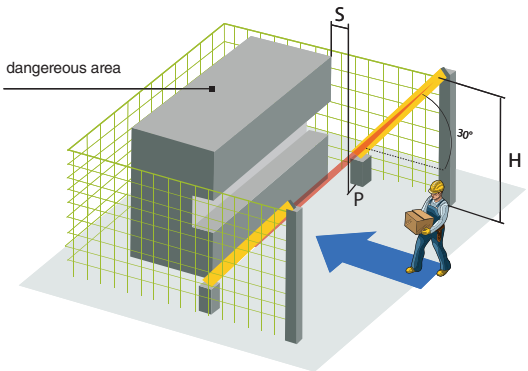

With angle a > 30° refer to the case of approach perpendicular to the protected plane. (Previous case)

With angle a < 30° refer to the case of approach parallel to the protected plane (cases of previous page)

With α > 30°:
- The distance S refers to the beam farthest away from the hazardous point.
- The height of the beam farthest away from the hazardous point must not be greater than 1,000 mm.
- For the determination of height H or resolution d apply the following formulas to the lowermost beam:
H = 15 x (d - 50)
d = H / 15 + 50

Muting function

The Muting function is the provisional and automatic cut-out of the light curtain protective function in relation to the machine cycle. Muting can only occur in a safety condition. Two types of applications are envisaged:

1. Enabling personnel access inside dangerous area during the non-dangerous part of machine cycle

Positioning or removal of workpiece

Depending on the position of the tool, which is the most dangerous part, one of the two curtains (the one facing the tool working area) is active whereas the other is in Muting mode to enable the operator to load/unload the workpiece. Muting mode of the light curtains is subsequently reversed when the tool works on the opposite side of the machine.

2. Enabling access to material and preventing access to personnel

Pallet exit from dangerous area

The safety light curtain incorporates Muting sensors able to discriminate between personnel and materials. Only the material is authorized to pass through the monitored area.

The essential requirements regarding the Muting Function are described by the followings Standards:
IEC TS 62046 "application of the protective equipment to detect the presence of persons"
EN 415-4 "Safety of the Machinery - automatic palletizing systems"
IEC 61496-1 "Electro-Sensitive Protective Equipment"

General Requirements

- Muting is a temporary suspension of the safety–related function and it must be activated and de-activated automatically.
- The safety integrity level of the circuit implementing the Muting function shall be equal to that of the safety function temporarily suspended, so that the protection performance of the entire system is not adversely affected.
- Muting should be activated and de-activated only by means of two or more separate hardwired signals triggered by a correct time or space sequence.
- It shall not be possible to trigger Muting while the ESPE outputs are in the off state.
- It shall not be possible to initiate Muting by turning the device off and then on again.
- Muting shall be only activated in an appropriate point of the machine cycle, i.e. only when there is no risk for the operator.
- Muting sensors shall be mechanically protected to prevent mismatch in case of impact.

Muting: palletizers and materials handling systems

Requirements for the monitoring of the openings

- Monitor the load, not the pallet, otherwise the operator might go into the hazardous zone being dragged by the pallet.
- Muting time must be restricted to the actual time taken by the material to pass through the opening.
- Muting must be time-restricted.
- Sensor mismatch with effect similar to their actuation shall not allow a condition of permanent Muting.
- The configuration and positioning of the Muting sensors shall ensure reliable differentiation between personnel and material.
- The layout of the opening, the positioning of the Muting sensors and the additional side protections shall prevent personnel access to the dangerousarea for all the time the Muting function is activated and throughout the time the pallet crosses the opening.

Therefore it is necessary to realise a safety system able to distinguish between:

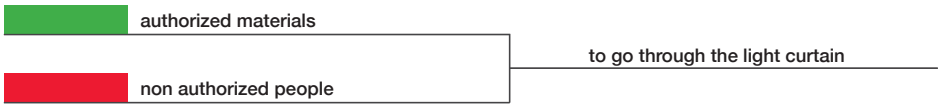

The Muting function can be present on both Type 2 and Type 4 Safety light Curtains.

ЭйБиЭн www.abn.by

Common solutions for Muting sensor positioning

Muting with 2 crossed-beam sensors
Configuration type T with timing monitoring and two-way pallet operation:

- The point of intersection of the two beams shall lie in the segregated dangerous area beyond the light curtain.
- A fail safe timer shall be provided to restrict Muting to the time needed for the material to cross the opening.
- The Muting function shall be activated only if the Muting sensors are contemporaneously intercepted: (t2(S2) – t1(S1) = 4 seconds max.).
- The two beams shall be continuously interrupted by the pallet throughout the transit through the sensors.
- A matt cylindrical object D=500 mm (simulating the size of a human body) shall not trigger the Muting function.

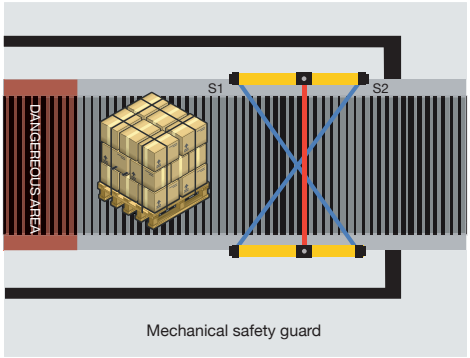

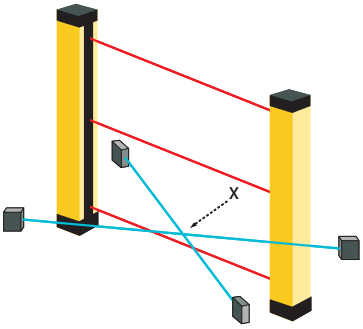

Muting sensor beam intersection shall be positioned the higher up or equal than level of the lower light curtain beam to avoid possible tampering or accidental triggering of Muting.

Muting with 4 parallel-beam sensors
Configuration type T with timing and/or sequence monitoring
Two-way pallet operation:

- The 4 Muting sensors shall be all actuated together for a brief moment (sequential actuation and de-activation of the 4 sensors).
- The distance between sensors and the sensing field of the light curtain shall be:

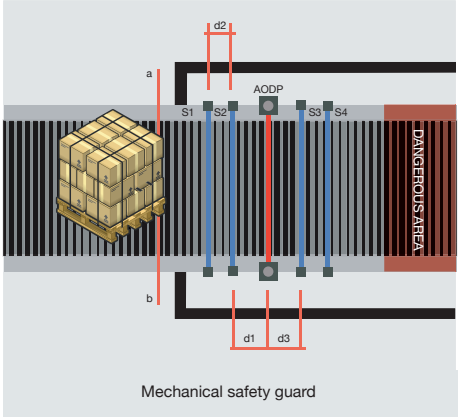

dl and d3 < 200 mm

To prevent undetected personnel access by preceding or following immediately after the pallet during Muting.

d2 > 250 mm

To prevent personnel limb, garment, etc. from enabling Muting by triggering two sensors simultaneously.

Muting with 2 crossed-beam or parallel-beam sensors
Configuration type L with timing monitoring and oneway only (exit from dangerous area) pallet operation:

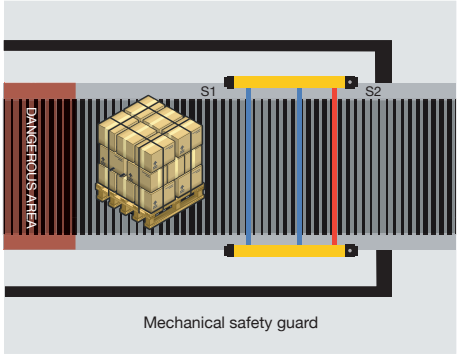

- Muting sensors shall be positioned beyond the light curtain in the dangerous area.
- Muting shall be disabled as soon as the light curtain is cleared and not later than 4 seconds max. from the instant the first of the two Muting sensor is cleared. The timer monitoring the 4 seconds shall be a safety-related item.

Possibe functions associated with Muting are:

- **Muting sequence:** in case Muting inputs are not activated within the right temporal sequence Muting function is excluded.
- **Maximum Muting Time-Out:** if barriers remains in Muting condition longer than the prefixed time muting function is automatically stopped.
- **Override function:** if a wrong muting sequence occures or any material remains blocked inside protected area it's not possible to restart the machine. Override function allows emergency forced temporary restart of the machine by activiating a dedicate signal on the barrier. That allows to free the control area from the obstacle.

Blanking function

Blanking is an auxiliary function of safety light curtains for which the introduction of an opaque object inside parts of the light curtain's protection field is allowed without causing the stoppage of the machine. Blanking is only possible in the presence of determined safety conditions and in accordance with a configurable operating logic. The blanking function is therefore particularly useful when the light curtain's protection field must be inevitably intercepted by the material being worked or by a fixed or mobile part of the machine. In practice, it is possible to keep the light curtain's safety outputs in an ON condition, and the machine working, even if a pre-determined number of beams within the protection fields are being intercepted.

Fixed Blanking allows a fixed portion of the protection field (i. e. a fixed set of beams) to be occupied, while all the other beams operate normally.

Floating Blanking allows the object to move freely inside the light curtain's protection field occupying a given number of beams, at the condition that the occupied beams are adjacent and that their number is not higher than the configured one.

Floating Blanking with compulsory object presence makes the light curtain work in a reverse way within the blanked portion of the protection field. That is, the blanked beams must be occupied during blanking and therefore the object has to be inside the protection field for the light curtain to remain in the ON state. In this case too the object can move freely within the protection field if the above conditions are respected.

Requirements for the blanking function can be found in the Technical Specification **IEC/TS 62046** describing additional means that may be required to prevent a person from reaching into the hazard through the blanked areas of the detection zone.

Warning

- The use of the blanking function can be allowed depending on the characteristics of the application to be protected. Based on the risk analysis of your application, check whether the use of the blanking function is allowed for that particular application and with what features.
- M.D. does not assume responsibility for the improper use of the blanking function nor for the possible damages deriving from it.
- The use of the blanking function may need a recalculation of the safety distance due to the modified detection capability.

Minimum distance from reflecting surfaces

The optical beams of the projector, having a beam angle that is not null, can partly be diverted by reflective surfaces located near to the safety light curtain. This may mean that a break in the direct path of the optical beam is not detected, which is why all reflective surfaces and reflective objects (in any position they may have with respect to the controlled area, above, under, inside or outside) must respect a minimum distance from the direct path of the beams of the Safety light Curtain.

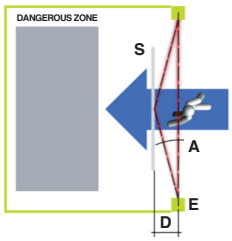

E Emitter
R Receiver
D minimum distance
S reflective surface
A aperture angle
P operatig distance

Safety light Curtains respect the maximum beam angle defined by IEC / EN 61496-2.
The safety distance D is calculated considering the entire beam angle and the safety light curtain reciprocally orientated towards the reflective surface by an angle a, in this way we consider the case of alignment at the limit of reciprocal visibility between the emitter and receiver, but which is more dangerous due to the effects of the reflection.

For ranges less than 3 m the value calculated at 3 m applies:

D = tan(A) * P/2

For P ≥ 3 m the safety distance D to take is calculated as follows:

Type 2: A = 10° ⟶ tan(A) = 0.1763

Type 4: A = 5° ⟶ tan(A)= 0.0875

ЭйБиЭн www.abn.by

The following chart shows minimum distance from reflective surface for Type 2 and Type 4 safety light curtains with a maximum operating distance of 10 m.

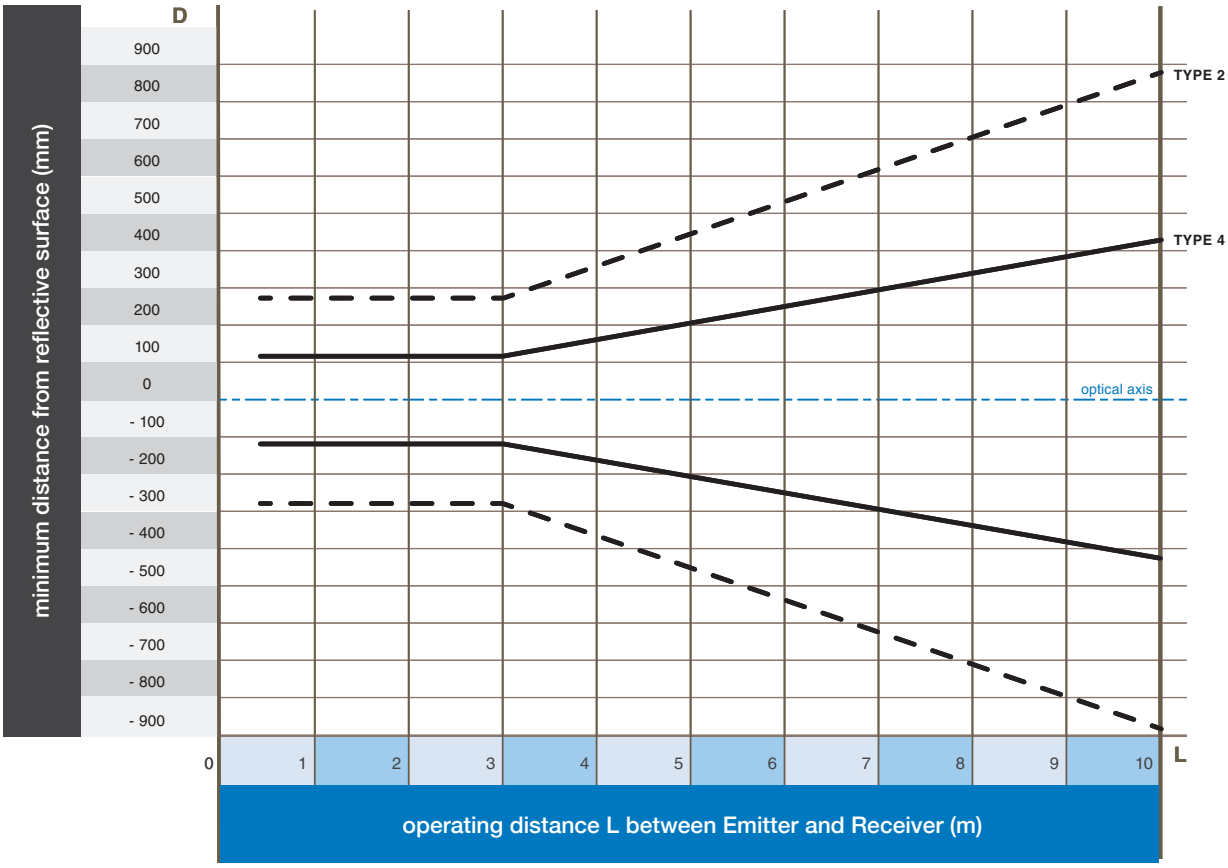

Instructions for component installation

The angular opening of a safety light curtain is extremely narrow (±5° for Type 2 and ±2,5° for Type 4), therefore the alignment procedure must be carried out with great care:

• The brackets must make it possible to position both the emitter and the receiver, and at the same time they must be strong enough to maintain the alignment under working conditions. Furthermore, remember that eventual vibrations or shock could misalign the Safety light Curtain.

• If beam deflecting mirrors are used, it is necessary to keep in mind that the alignment procedure will be more difficult. As a matter of fact, considering that each mirror will involve a capacity reduction of about 15% (depending on the quality of the mirror) and that the mirror brackets may not be particularly steady, the system will be easily misaligned (for example when trying to clean the mirror).

• The presence of shiny or reflective surfaces can cause the safety light curtain to be ineffective. It is therefore necessary to position the safety light curtain at a suitable distance from any reflective surfaces.

• Any control unit which does not provide at least an IP54 protection degree must be installed within a switchboard, in order to guarantee this minimum protection.

• The safety light curtain must be positioned so as to avoid anyone accidentally leap frogging it. When determining the minimum distance at which the safety light curtain must be positioned in the danger area, it is necessary to take into account.

the safety light curtain's response time and the machine's shutdown time, as previously described.

• The start-up or restart-up devices must be positioned so as to prevent the function in question from being activated by an operator within the protected area.

Integration of the ESPE

As the ESPE will be integrated in the machine safety-related control system, the choice of its safety level will depend on the result of risk analysis and, consequently, on parameters such as PL, SIL or Category resulting from this analysis. Product Standards (Type C) usually recommend the most suitable ESPE type for each safety-related function involved. If type C Standards are not available, adopt the recommendations of ISO 13849-1 and IEC 62061. Also consider that the overall safety integrity of the serial connection: input – control unit – actuators, shall necessarily be equal to or lower than that of the weaker device.

Rules for correct interconnection of protection devices to machine control system

The interconnections between safety outputs of ESPE (OSSD) and the machine primary control elements, the positioning and selection of reset push buttons shall not reduce or eliminate the extent of safety integrity assigned to the safety-related machine control system.

Figure A shows the most common example, i.e. where the machine control and monitoring system (e.g. the PLC) has no safety-related function. In this case, the safety-related control system monitoring the protective devices connected to it must operate autonomously and must be inserted between the machine control system and the machine primary control elements.

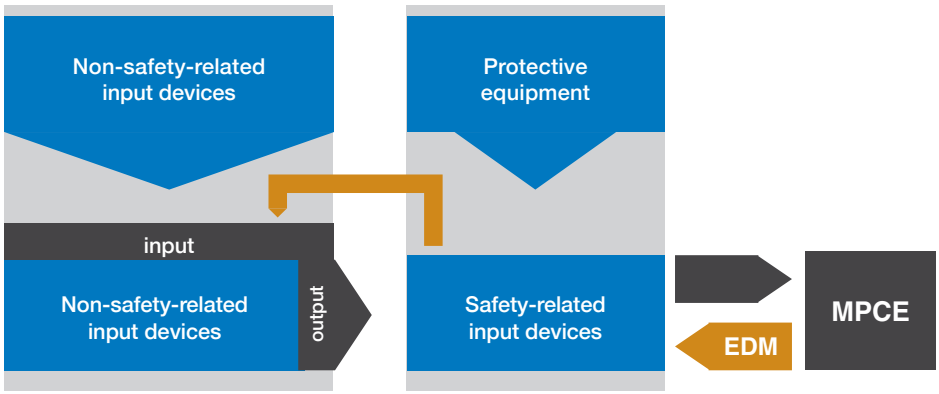

Figure A

MPCE = Machine Primary Control Element

If the machine is equipped with an integrated safety-related control and management system (safety-related PLC), see figure B, machine operational functions and safety-related functions should be governed through the centralized safety-related system.

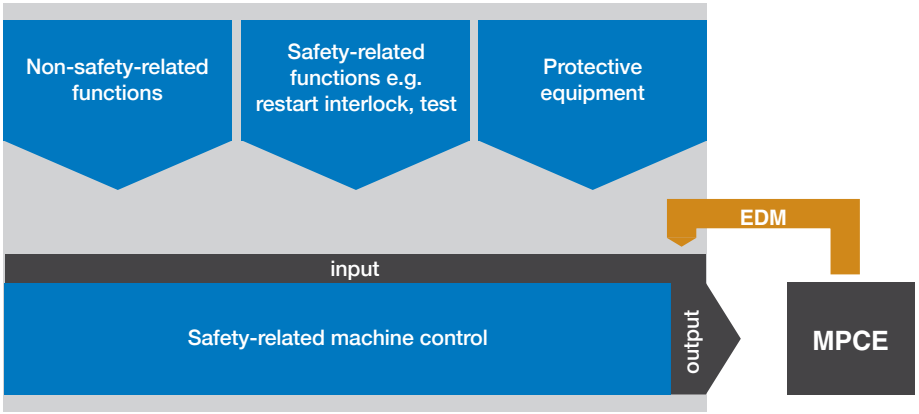

Figure B

ЭйБиЭн www.abn.by

Glossary

symbol	detection	characteristics
	Warning to avoid danger!	A warning indicates real or potential hazards. Its task is to indicate procedures and behaviour that can avoid accidents. Read and follow these instructions carefully.
	Indication	Indications that can help achieve better performance.
	Emitter symbol	This symbol identifies devices that have the function of a projector.
	Receiver symbol	This symbol identifies devices that have the function of a receiver.
	Finger protection	This symbol marks devices designed to detect fingers entering a protected area. It refers to safety light curtains with a resolution of 14 mm, this value enables using the minimum safety distance and therefore reducing the loading and unloading times to a minimum and the least fatigue for the operator.
	Hand protection	This symbol marks devices designed to detect a hand entering a protected area. It refers to safety light curtains with a resolution less than or equal to 40mm; these resolutions allow safety distances compatible with short loading and unloading times and a low level of operator fatigue.
	Presence control	This symbol marks devices designed to detect limbs entering a protected area or detect human presence in a protected area. For presence detection, with light curtains in a horizontal position, resolutions of between 50 and 116mm are to be used, the height off the ground is calculated in relation to these values.
	Body protection	This symbol marks devices designed to detect a body entering a protected area. It refers to multi-beam safety light grids with 2, 3 or 4 beams. These light curtains are usually cost-effective and feature a long range, they enable creating protection for extensive areas and on more than one side, using diverter mirrors.

notes

ЭйБиЭн www.abn.by

SBCR03 series
Control unit
Type 2

features

- Up to 6 sets of safety photocells M18 (SH4-IA) or M30 (TH6-IA) interconnectable
- DIN RAIL Mounting
- Body protection and access control
- Cat. 2 according to EN 61496-1
- Cat. 2 / PL c according to EN ISO 13849-1; SIL CL 1 acording to EN 62061 / IEC 61508
- Models with single/double channel Muting and Override functions
- Response time less than 5 ms
- 2 OSSD outputs

web contents

- Application notes
- Photos
- Catalogue / Manuals

code description

SBCR03 / S - A 0

series	SBCR03	Safety control unit for safety photocells
power supply	S	24 Vcc operating voltage
inputs	A	Suitable for safety photocells
type	0	Standard model
	M	Muting/Override model

connectable devices

series	photocell	operating distance
SH4 - IA	M18	until 10 m
TH6 - IA	M30	until 60 m

technical specification

	SBCR03/S-A0	SBCR03/S-AM
operating voltage	24 Vdc	
tolerance on operating voltage	- 30...+ 20 %	
voltage ripple	5 Vpp	
absorbed current	100 mA	
available functions	Safety function	
	START / RESTART / INTERLOCK ≤125 ms	
	EDM (300 ms relay switching time monitoring)	
	-	muting
	-	double muting
	-	override
muting sequence	-	3 s (selectable)
muting Time-Out	-	3 min (selectable)
muting sensors type	-	4 x PNP, NO
muting lamp output	-	2 lamps 1 to 10 W, from 1 to 10 W, 24 Vcc
status lamp output	-	from 1 to 10 W, 24 Vdc
output voltage drop	2.5 V @ 500 mA	
response time	≤ 5 ms	
recovery time	≥ 100 ms	
IP mechanical protection	to be mounted inside a cabin with IP54 minimum	
operating temperature	-20°...+60°C	
storage temperature	-25°...+75°C	
housing material	ABS UL VO	
weight	700 g	

safety parameters

	Category 2 safety control unit
safety integrity level	SIL3 (IEC 61508), SIL CL 3 (EN 62061) (1)
Type	4 (EN ISO 13849) (1)
performance level	PL e (EN ISO 13849) (1)
maximum frequency of request (3)	60/min (EN ISO 13849)
PFH_d (4)	8.1×10^{-6}
TM (life time)	20 years

ЭйБиЭн www.abn.by

electric diagrams of the connections

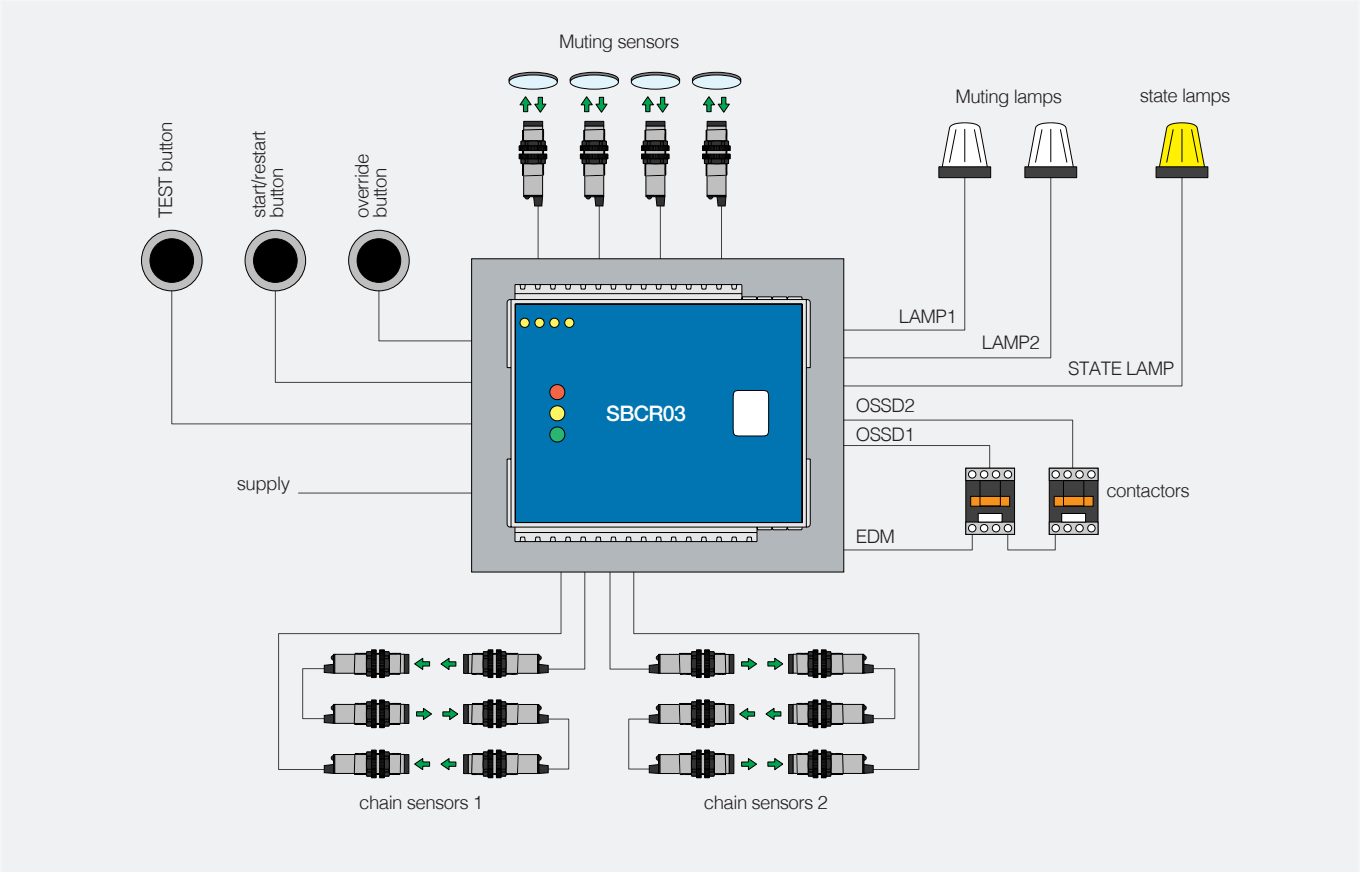

Muting conditions

n° of Muting sensors	Muting signals combinations
2	M1 & M2
3	M3 followed by M1& M2 (direction recognition)
2+2	M1 & M2 and/or M3 & M4 M1 M2 muting is indipendent from M3 M4

Muting conditions and Muting sequence control

n° of Muting sensors	Muting signals combinations
2	M1 & M2 must be active within 3 s
3	M1 & M2 must be active within 3 s (with M3 is active)
2+2	M1 & M2 and / or M3 & M4 must be active within 3 s Muting sequence of M1 M2 is indipendent from Muting sequence of M3 M4

dimensions (mm)

SBCR03/S-A0

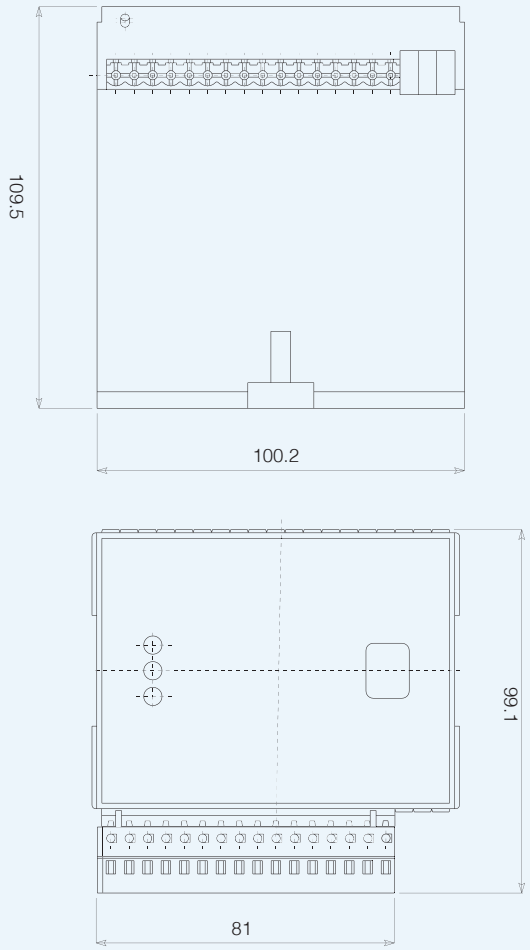

SBCR03/S-AM

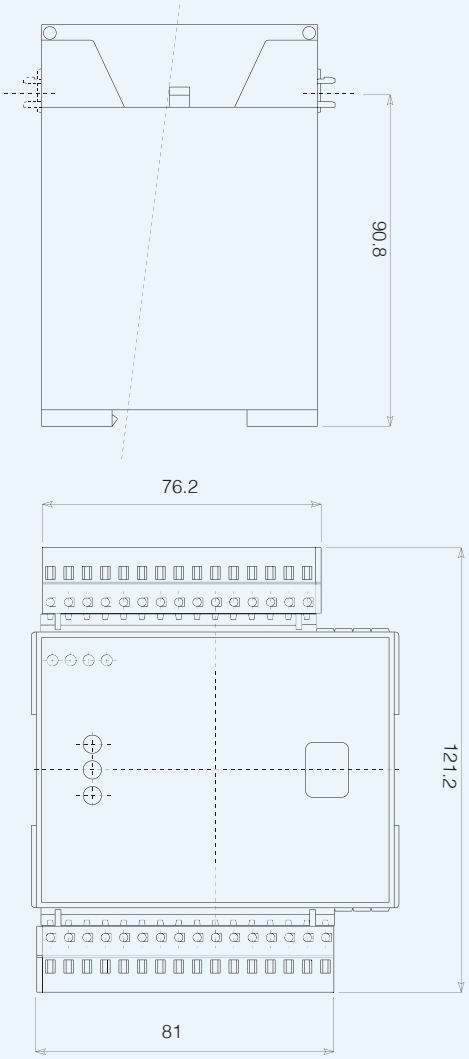

ЭйБиЭн www.abn.by

SH-IA/IC e TH-IA/IC series

Photocells

Type 2 and Type 4

features

- M18 Models 10 m (axial optic) and 5 m (radial optic) operating distance
- M30 models 60 m operating distance
- EN50100 Category 2 and Category 4 compliant
- LED indicators
- Plastic and Metal Housing
- Inputs and Outputs IEC61131-2 compliant and adaptable with any safety module
- To be used together with a Category 2 or Category 4 safety control unit to obtain a safety system EN ISO 13849 compliant

web contents

- Application notes
- Photos
- Catalogue / Manuals

code description (SH series)

SH 2 / E - 0 E IA

series	SH	M18 safety photocell
type	2	Type 2, 123 kHz modulation
	4	Type 4 123 kHz modulation
model	E	Emitter unit
	R	Receiver unit
housing	0	Plastic housing, axial emission
	1	Metal housing, axial emission
	2	Plastic housing, radial emission
	3	Metal housing, radial emisison
output connection	E	M12 connector output
	K	M12 radial connector output
logic	IA	Emitter Test Input Logic L = light H = dark, Receiver Output Logic: L = light, H = dark
	IC	Emitter Test Input Logic H = light L = dark, Receiver Output Logic: H = light, L = dark

code description (TH series)

TH 2 / E - K IA

series	TH	M30 safety photocell
type	2	Type 2, 123 kHz modulation
	6	Type 4, 123 kHz modulation
model	E	Emitter unit
	R	Receiver unit
output connection	K	M12 radial connector
logic	IA	Emitter Test Input Logic L = light H = dark, Receiver Output Logic: L = light, H = dark
	IC	Emitter Test Input Logic H = light L = dark, Receiver Output Logic: H = light, L = dark

available models (Type 2)

series	diameter	emission	optic	operating distance (m)	connection	housing	unit	model
SH2	M18	red	Type 2 axial	10	M12 axial	plastic	Emitter	SH2/E-0EIC
							Receiver	SH2/R-0EIC
			Type 2 radial	5			Emitter	SH2/E-2EIC
							Receiver	SH2/R-2EIC
			Type 2 axial	10		metallic	Emitter	SH2/E-1EIC
							Receiver	SH2/R-1EIC
			Type 2 radial	5			Emitter	SH2/E-3EIC
							Receiver	SH2/R-3EIC
			Type 2 axial	10	M12 radial	plastic	Emitter	SH2/E-0KIC
							Receiver	SH2/R-0KIC
						metallic	Emitter	SH2/E-1KIC
							Receiver	SH2/R-1KIC
TH2	M30			60			Emitter	TH2/E-KIC
							Receiver	TH2/R-KIC

available models (Type 4)

series	diameter	emission	optic	operating distance (m)	connection	housing	unit	model
SH4	M18	red	Type 4 axial	10	M12 axial	plastic	Emitter	SH4/E-0EIC
							Receiver	SH4/R-0EIC
							Emitter	SH4/E-0EIA
							Receiver	SH4/R-0EIA
			Type 4 radial	5			Emitter	SH4/E-2EIC
							Receiver	SH4/R-2EIC
			Type 4 axial	10		metallic	Emitter	SH4/E-1EIC
							Receiver	SH4/R-1EIC
							Emitter	SH4/E-1EIA
							Receiver	SH4/R-1EIA
			Type 4 radial	5			Emitter	SH4/E-3EIC
							Receiver	SH4/R-3EIC
			type 4 axial	10		plastic	Emitter	SH4/E-0KIA
					M12 radial		Receiver	SH4/R-0KIA
						metallic	Emitter	SH4/E-1KIA
							Receiver	SH4/R-1KIA
TH6	M30			60			Emitter	TH6/E-KIC
							Receiver	TH6/R-KIC
							Emitter	TH6/E-KIA
							Receiver	TH6/R-KIA

P.N.: If used with SBCR03 control unit, **the risulting system is of Type 2.**

ЭйБиЭн www.abn.by

technical specifications

	SH axial	SH radial	TH
nominal operating distance Excess Gain = 2	0...16 m	0...7 m	0...84 m
nominal operating distance Excess Gain = 4	0...11 m	0...5 m	0...60 m
model	M18		M30
spot diameter	12		26
minimum detectable object	ø 15 mm		ø 24 mm
emission	red		
Effective Aperture Angle (EAA)	typical 1.8°; ± 2,5°		
operating voltage	10...30 Vdc		
current comsumption	≤ 25 mA (emitter); ≤ 25 mA (receiver); 22 mA (typical, light mode)		
output current	50 mA; 70 mA max		
emission wavelength	660 nm		
standard modulation frequency	123 KHz		
supply voltage UB	19.2 V...28 V		
residual ripple	≤ 5 V		
HIGH level output	U_B - 3.2 V ... U_B - 2.5 V (typical)		
LOW level output	5 V		
reaction time receiver output per transaction LIGHT / DARK	200 µs, from front to LOW DARK models for IC , to HIGH for models IA		
reaction time receiver output per transaction DARK /LIGHT	400 µs, from front to LIGHT UP models for IC , LOW models for IA		
response time of safety	it would depend on the security utility		
LOW input Test projector	< 5 V IC output inactive ; model IA active issue		
HIGH input Projector test	vin test >> 15 V IC output active ; model IA issue inactive		
test input LOW level (Emitter)	IC models , LOW = DARK ; HIGH = LIGHT IA models , HIGH = DARK ; LOW = LIGHT		
electrical protection class	III		
IP mechanical protection	IP67 (EN60529)		
working temperature	-20 °C... + 55 °C (typical + 20 °C)		
storage temperature	-40°C... + 75°C		
humidity (no condensation)	15%...95%		
weight	30 g (plastic); 67 g (metallic)		212 g
shocks	10 g; 16 ms; (IEC60068-2-6)		
vibration	10 Hz ... 55 Hz, 1 oct./min, 0.35 mm (IEC 60068-2-6)		
materials	Lens: Glass with PBT ring; Housing: Brass nickel-plated or PBT; M12 plug:PC		Lens: Glass, aluminium; Housing: Brass nickel plated; End cap: PC; M12 plug: PBT

no load.

external power supply to the devices must include a brief power failure of up to 20 ms In conformity with EN 60204. Suitable power supplies are commonly available on the market . Operation with the network short-circuit proof max. 8 A. The connections used are protected against reverse polarity. The sensors SH and TH, and the test device downstream, are connected to the same municipality and for paving ground.

must not exceed or fall below of UB tolerances.

the output of the sensor is normally connected to the test device, isn't an OSSD as for IEC 61496-1.

safety specifications (Machinery Directive)

Type 2 M18 and M30 safety photocells	
Type	2 (IEC 61496) [1]
safety integrity level	SIL1 (IEC 61508), SIL CL 1 (EN 62061) [1]
category	2 (EN ISO 13849) [1]
self test frequency [2]	100/s (EN ISO 13849)
maximum frequency of request [3]	60/min (EN ISO 13849)
performance level	PL c (EN ISO 13849) [1]
PFH_d [4]	1×10^{-6}
TM (life time)	20 years

Type 4 M18 and M30 safety photocells	
Type	4 (IEC 61496) [1]
safety integrity level	SIL3 (IEC 61508), SIL CL 3 (EN 62061) [1]
category	4 (EN ISO 13849) [1]
performance level	PL e (EN ISO 13849) [1]
maximum frequency of request [3]	60/min (EN ISO 13849)
PFH_d [4]	8.1×10^{-10}
TM (life time)	20 years

[1] Only in combination with suitable test devic [2] The test rate must not be exceeded
[3] Between two requests for a safety-related reaction from the device, at least 100 internal or external tests must be undertaken [4] Average probability of failure per hour, due to a serious error

electrical diagrams of the connections

M12 emitter

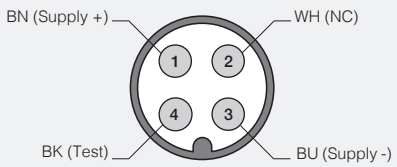

M12 receiver

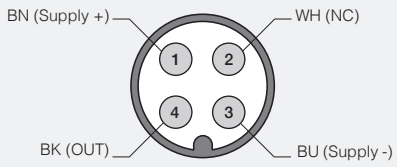

BN	brown
BU	blue
BK	black
WH	white

2 sensors caascade connection example

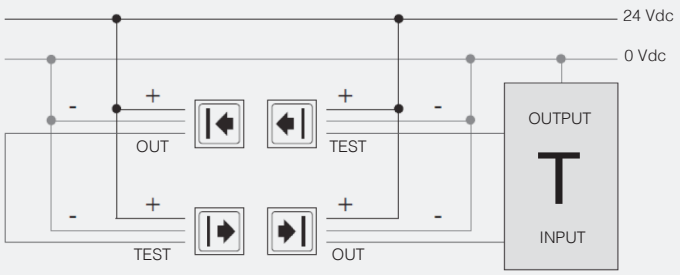

The pairs remote, comprise an emitter and a receiver connected in a chain, that are running the repeater function, must be homogeneous, that is composed of an emitter and a receiver both with the same logic of Test and Exit (both type IC or IA). Couples connected to the test unit must obviously be chosen logically compatible with that unit. It should not exceed a maximum of three pairs of sensors in the chain. If you use more than one pair of monitoring sensors connected in the chain, it must always be strictly observed that the angle of propagation / reception angle of a pair of sensors does not interfere with the other of the same chain. If you use more than one pair of monitoring sensors connected to the same unit and this unit does not use a scanning procedure of the pairs it must be strictly observed that the angle of propagation / reception angle of a pair of sensors does not interfere with the other the same unit. If it takes more units it is possible that pairs of the different units may interfere, in this case the phase of test can fail causing blockages or sporadic system. Only in this case, to avoid interference it is possible to use models with different modulation frequency.

ЭйБиЭн www.abn.by

dimensions (mm)

plastic housing

SH2(4)/*-0EIC(IA)	SH2(4)/*-2EIC(IA)
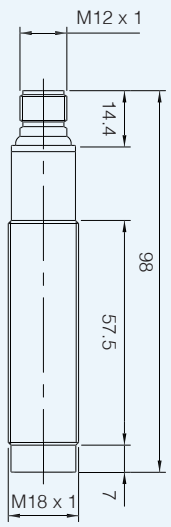	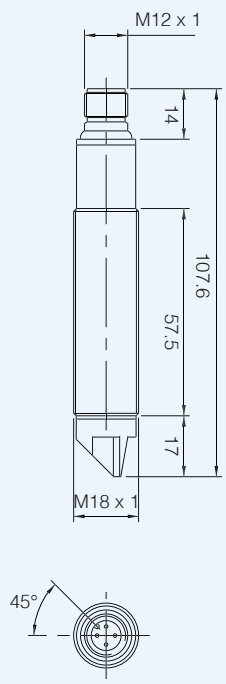

dimensions (mm)

accessories included in all plastic models

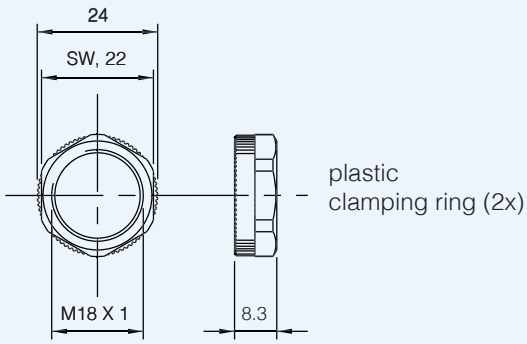

dimensions (mm)

M18 metal housing

SH2(4)/*-1EIC(IA)	SH2(4)/*-3EIC(IA)	SH2(4)/*-*KIC(IA)
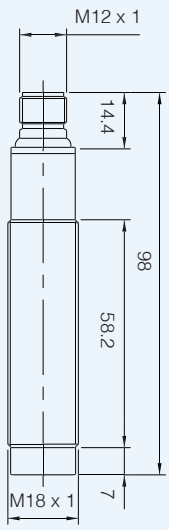	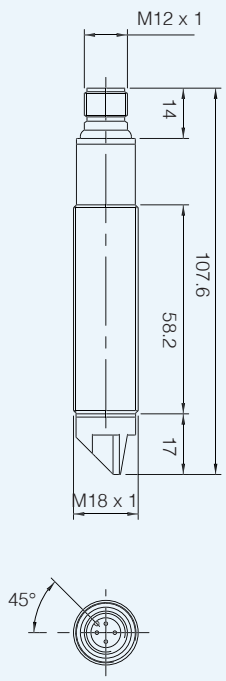	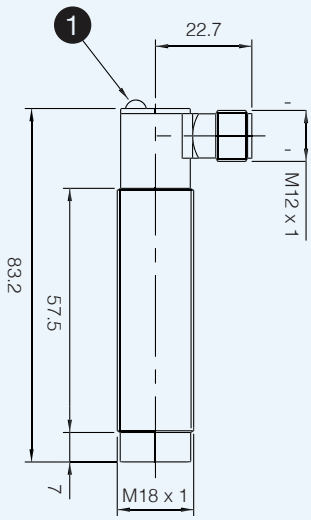

1 LED

dimensions (mm)

accessories included in all M18 metallic models

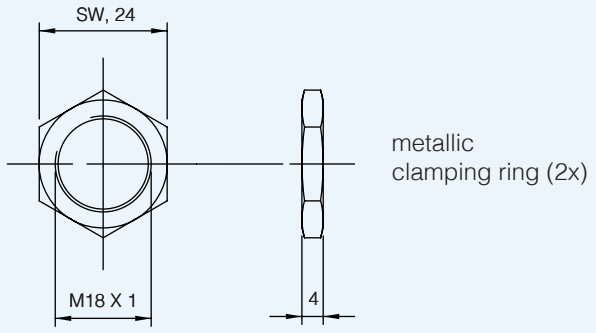

dimensions (mm)

M30

TH2(6)/*-1KIC (IA)

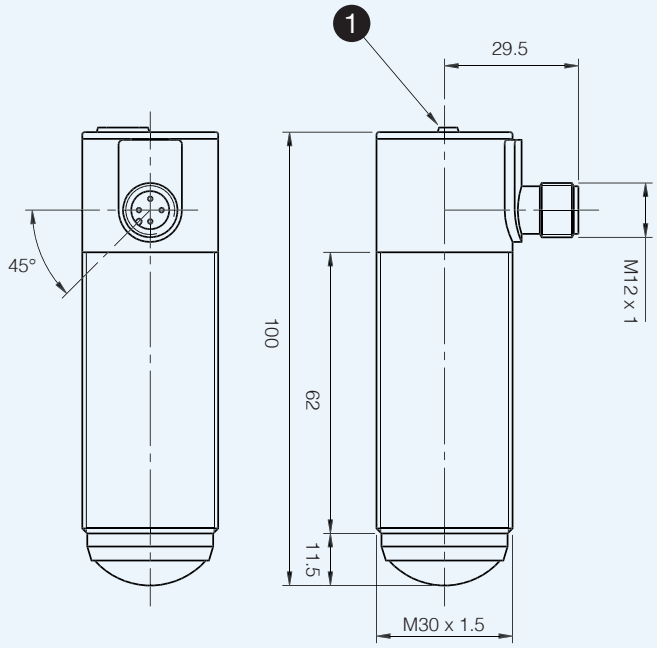

1 LED

dimensions (mm)

accessories included in all M30 models

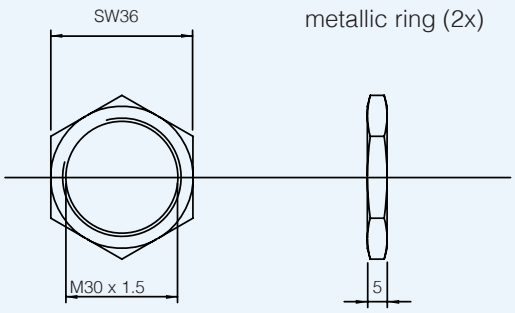

ЭйБиЭн www.abn.by

LS2, LS2_K, LS2_H series

Light Curtains

Type 2 according to IEC 61496-1 and 2

features

- Compact housing (28 x 30 mm) and no dead zone on cap side
- Resolution 30, 40, 50, 90 mm for hand protection and presence control and 2, 3, 4 beams for body protection/access control
- Controlled distance up to: 3, 4,10, 12 m
- Base, Standard versions and Master, Slave version to connect up to 3 sets in cascade configuration
- Selectable Automatic/Manual Restart and EDM integrated functions (Standard models)
- Selectable controlled distance
- IP69K protection models (LS2_K) and models with integrated heating system to reach -25°C operating temperature (LS2_H)
- Standard M12 da 5 and 8 poles connectors

web contents

- Application notes
- Photos
- Catalogue / Manuals

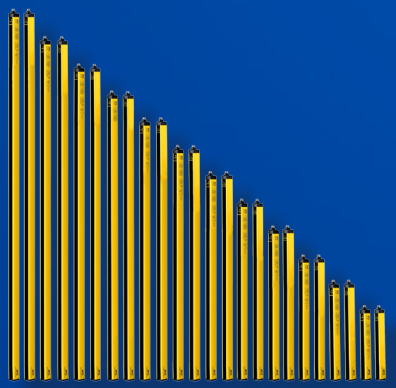

IP69K CE c UL us TÜV

code description

LS2 ER / 30 - 015

series	LS2	Type 2 Safety light Curtains 28 x 30 mm compact housing
E/R	ER	Emitter / Receiver couple
beams	30	Light grid, 30 mm resolution, hand protection
	40	Light grid, 40 mm resolution, hand protection
	50	Light grid, 50 mm resolution, presence control
	90	Light grid, 90 mm resolution, presence control
	0A	2 beams; body protection, 500 mm resolution
	0B	3 beams; body protection, 400 mm resolution
	0C	4 beams; body protection, 300 mm resolution
area	015 ÷ 180	Protected height from 150 to 1,800 mm (light grids)
	050 ÷ 090	Protected height 500, 800, 900 mm (multiple light beams)
model		Standard model with selectable MANUAL/AUTOMATIC Restart and EDM functions
	B	Base model with integrated AUTOMATIC Restart
	M	Master Model with selectable functions
	S	Intermediate Slave model
	F	Final Slave model
protection		IP65 and IP67 protection, 10° ... 55 °C operating temperature
	K	Models in transparent cylindrical housing, IP69K, suitable for applications in the food industry. Resistance to washing with water at 100 bar, 80 °C Housing in PMMA, caps in POM C with silicone seals. Brackets in stainless steel AISI 316L. Operating temperature -10 ... 55 °C.
	H	Models in transparent cylindrical casing, IP69K protection, thermostated, suitable for applications in the food industry. Resistance to washing with water at 100 bar, 80 °C. Housing in PMMA, POM C caps and silicone seals. Brackets in stainless steel AISI 316L. Operating temperature -25 ... 55 °C.

available models

30 mm resolution; 0...4 / 0...12 m controlled distance

protected height (mm)	n° of beams	response time (ms)	series
160	8	4.5	LS2ER/30-015B
			LS2ER/30-015
			LS2ER/30-015F
310	16	6	LS2ER/30-030B
			LS2ER/30-030
			LS2ER/30-030M
			LS2ER/30-030F
			LS2ER/30-030S
460	23	8	LS2ER/30-045B
			LS2ER/30-045
			LS2ER/30-045M
			LS2ER/30-045F
			LS2ER/30-045S
610	31	10	LS2ER/30-060B
			LS2ER/30-060
			LS2ER/30-060M
			LS2ER/30-060F
			LS2ER/30-060S
760	38	11	LS2ER/30-075B
			LS2ER/30-075
			LS2ER/30-075M
			LS2ER/30-075F
			LS2ER/30-075S
910	46	13	LS2ER/30-090B
			LS2ER/30-090
			LS4ER/30-090M
			LS2ER/30-090F
			LS2ER/30-090S
1,060	53	14.5	LS2ER/30-105B
			LS2ER/30-105
			LS2ER/30-105M
			LS2ER/30-105F
			LS2ER/30-105S
1,210	61	16	LS2ER/30-120B
			LS2ER/30-120
			LS2ER/30-120M
			LS2ER/30-120F
			LS2ER/30-120S
1,360	68	17.5	LS2ER/30-135B
			LS2ER/30-135
			LS2ER/30-135M
			LS2ER/30-135F
			LS2ER/30-135S
1,510	76	19.5	LS2ER/30-150B
			LS2ER/30-150
			LS2ER/30-150M
			LS2ER/30-150F
			LS2ER/30-150S
1,660	83	21	LS2ER/30-165
1,810	91	22.5	LS2ER/30-180

available models

40 mm resolution; 0...4 / 0...12 m controlled distance

protected height (mm)	n° of beams	response time (ms)	series
160	6	4	LS2ER/40-015B
			LS2ER/40-015
			LS2ER/40-015F
310	11	5	LS2ER/40-030B
			LS2ER/40-030
			LS2ER/40-030M
			LS2ER/40-030F
			LS2ER/40-030S
460		6	LS2ER/40-045B
			LS2ER/40-045
			LS2ER/40-045M
			LS2ER/40-045F
			LS2ER/40-045S
610	21	7.5	LS2ER/40-060B
			LS2ER/40-060
			LS2ER/40-060M
			LS2ER/40-060F
			LS2ER/40-060S
760	26	8.5	LS2ER/40-075B
			LS2ER/40-075
			LS2ER/40-075M
			LS2ER/40-075F

ЭйБиЭн www.abn.by

available models

40 mm resolution; 0...4 / 0...12 m controlled distance

protected height (mm)	n° of beams	response time (ms)	series
760	26	8.5	LS2ER/40-075S
910	31	9.5	LS2ER/40-090B
			LS2ER/40-090
			LS2ER/40-090M
			LS2ER/40-090F
			LS2ER/40-090S
1,060	36	10.5	LS2ER/40-105B
			LS2ER/40-105
			LS2ER/40-105M
			LS2ER/40-105F
			LS2ER/40-105S
1,210	41	11.5	LS2ER/40-120B
			LS2ER/40-120
			LS2ER/40-120M
			LS2ER/40-120F
			LS2ER/40-120S
1,360	46	13	LS2ER/40-135B
			LS2ER/40-135
			LS2ER/40-135M
			LS2ER/40-135F
			LS2ER/40-135S
1,519	51	14	LS2ER/40-150B
			LS2ER/40-150
			LS2ER/40-150M
			LS2ER/40-150F
			LS2ER/40-150S

available models

50 mm resolution; 0...4 / 0...12 m controlled distance

protected height (mm)	n° of beams	response time (ms)	series
160	4	3.5	LS2ER/50-015B
			LS2ER/50-015
			LS2ER/50-015F
310	8	4.5	LS2ER/50-030B
			LS2ER/50-030
			LS2ER/50-030M
			LS2ER/50-030F
			LS2ER/50-030S

available models

50 mm resolution; 0...4 / 0...12 m controlled distance

protected height (mm)	n° of beams	response time (ms)	series
460	12	5.5	LS2ER/50-045B
			LS2ER/50-045
			LS2ER/50-045M
			LS2ER/50-045F
			LS2ER/50-045S
610	16	6	LS2ER/50-060B
			LS2ER/50-060
			LS2ER/50-060M
			LS2ER/50-060F
			LS2ER/50-060S
760	20	7	LS2ER/50-075B
			LS2ER/50-075
			LS2ER/50-075M
			LS2ER/50-075F
			LS2ER/50-075S
910	24	8	LS2ER/50-090B
			LS2ER/50-090
			LS4ER/50-090M
			LS2ER/50-090F
			LS2ER/50-090S
1,060	28	9	LS2ER/50-105B
			LS2ER/50-105
			LS2ER/50-105M
			LS2ER/50-105F
			LS2ER/50-105S
1,210	32	10	LS2ER/50-120B
			LS2ER/50-120
			LS2ER/50-120M
			LS2ER/50-120F
			LS2ER/50-120S
1,360	36	10.5	LS2ER/50-015B
			LS2ER/50-015
			LS2ER/50-015F
			LS2ER/50-030B
			LS2ER/50-030
1,510	40	11.5	LS2ER/50-030M
			LS2ER/50-030F
			LS2ER/50-030S
			LS2ER/50-045B
			LS2ER/50-045

available models

90 mm resolution; 0...4 / 0...12 m controlled distance

protected height (mm)	n° of beams	response time (ms)	series
310	4	3.5	LS2ER/90-030B
			LS2ER/90-030
			LS2ER/90-030M
			LS2ER/90-030F
			LS2ER/90-030S
460	6	4	LS2ER/90-045B
			LS2ER/90-045
			LS2ER/90-045M
			LS2ER/90-045F
			LS2ER/90-045S
610	8	4.5	LS2ER/90-060B
			LS2ER/90-060
			LS2ER/90-060M
			LS2ER/90-060F
			LS2ER/90-060S
760	10	5	LS2ER/90-075B
			LS2ER/90-075
			LS2ER/90-075M
			LS2ER/90-075F
			LS2ER/90-075S
910	12	5.5	LS2ER/90-090B
			LS2ER/90-090
			LS2ER/90-090M
			LS2ER/90-090F
			LS2ER/90-090S
1,060	14	6	LS2ER/90-105B
			LS2ER/90-105
			LS2ER/90-105M
			LS2ER/90-105F
			LS2ER/90-105S
1,210	16	6	LS2ER/90-120B
			LS2ER/90-120
			LS2ER/90-120M
			LS2ER/90-120F
			LS2ER/90-120S
1,360	18	6.5	LS2ER/90-135B
			LS2ER/90-135
			LS2ER/90-135M
			LS2ER/90-135F
			LS2ER/90-135S
1,510	20	7	LS2ER/90-150B
			LS2ER/90-150

available models

500 mm resolution; 0...4 / 0...12 m controlled distance

protected height (mm)	n° of beams	response time (ms)	series
510	2	3	LS2ER/0A-050B
			LS2ER/0A-050
			LS2ER/0A-050M
			LS2ER/0A-050F
			LS2ER/0A-050S

available models

400 mm resolution; 0...4 / 0...12 m controlled distance

protected height (mm)	n° of beams	response time (ms)	series
310	3	3.5	LS2ER/0B-080B
			LS2ER/0B-080
			LS2ER/0B-080M
			LS2ER/0B-080F
			LS2ER/0B-080S

available models

300 mm resolution; 0...4 / 0...12 m controlled distance

protected height (mm)	n° of beams	response time (ms)	series
910	4	3.5	LS2ER/0C-090B
			LS2ER/0C-090
			LS2ER/0C-090M

available models

30 mm resolution; 0...3 / 0...10 m controlled distance

protected height (mm)	n° of beams	response time (ms)	series
160	8	4.5	LS2ER/30-015K
310	16	6	LS2ER/30-030K
460	23	8	LS2ER/30-045K
610	31	10	LS2ER/30-060K
760	38	11	LS2ER/30-075K
910	46	13	LS2ER/30-090K
1,060	53	14.5	LS2ER/30-105K
1,210	61	16	LS2ER/30-120K
1,360	68	17.5	LS2ER/30-135K
1,510	76	19.5	LS2ER/30-150K

ЭйБиЭн www.abn.by

available models

30 mm resolution; 0...3 / 0...10 m controlled distance

protected height (mm)	n° of beams	response time (ms)	series
160	8	4.5	LS2ER/30-015H
310	16	6	LS2ER/30-030H
460	23	8	LS2ER/30-045H
610	31	10	LS2ER/30-060H
769	38	11	LS2ER/30-075H
910	46	13	LS2ER/30-090H
1,060	53	14.5	LS2ER/30-105H
1,210	61	16	LS2ER/30-120H
1,360	68	17.5	LS2ER/30-135H
1,510	76	19.5	LS2ER/30-150H

available models

0...3 / 0...10 m controlled distance

n° of beams	protected height (mm)	controlled area (mm)	response time (ms)	series
2	500	510	4.5	LS2ER/0A-050K
3	400	810	6	LS2ER/0B-080K
4	300	910	8	LS2ER/0C-090K

n° of beams	protected height (mm)	controlled area (mm)	response time (ms)	series
2	500	510	4.5	LS2ER/0A-050H
3	400	810	6	LS2ER/0B-080H
4	300	910	8	LS2ER/0C-090H

technical specifications

	LS2ER/**-***_	
operating voltage	19.2...28.8 Vdc	PELV power supplier according to EN 60204-1 Cap.6.4
power consumption, Receiver	2 W	no load
power consumption, Emitter	1 W	
power consumption, heater	2...10 W	H models, IP69K with heater
output type	2 x PNP	OSSD safety outputs
output current	400 mA	higher values are considered overload
equivalent resistive load	60 Ω	lower values are considered short circuit
capacitive load	0.82 µF	lower values may be considered short circuit
recovery time	2 s	
response time	2.5...20 ms	
effective aperture angle	± 5°	IEC 61496-1
artificial light rejection	according to IEC 61496-2	according to the reported standards
ambient light rejection	according to IEC 61496-2	
IP mechanical protection (standard models)	IP65 and IP67	without any additional precaution the device can't be used for outdoor applications
IP mechanical protection (special models)	IP65, IP67 and IP69K	external transparent tube resistant against 100 bar water jets
operating temperature	-10...+55°C	no condensation
operating temperature, K models	-10...+55°C	no condensation, models without internal heater
operating temperature, H models	-25...+55°C	models with internal heater
storage temperature	-25...+70°C	to be respected also during transportation
humidity	95%	no condensation
vibrations	according to IEC 61496-1	according to the reported standards
shocks	according to IEC 61496-1	
cable length (power supply/outputs)	100 m	cable section 0.34 mm2 (to respect max length)
max cable legth for Master Slave interconnections	50 m	
dimension (IP67 models)	28 (front) x 30 mm	painted aluminium RAL 1012
tube (IP69K models)	ø 56 mm	
connectors models LS2ER/**-***B	Emitter 1 x M12, 5p, male Receiver 1 x M12, 5p male	
connectors models LS2ER/**-***	Emitter 1 x M12, 5p, male Receiver 1 x M12, 8p male	
connectors models LS2ER/**-***M	Emitter 2 x M12, 5p, male Receiver 1 x M12, 8p male + 1 x M12, 5p male	
connectors models LS2ER/**-***S	Emitter 2 x M12, 5p, male Receiver 2 x M12, 5p male	
connectors models LS2ER/**-***F	Emitter 1 x M12, 5p, male Receiver 1 x M12, 5p male	
connectors models LS2ER/**-***K	Emitter cable 5 wires Receiver cable 8 wires	
connectors models LS2ER/**-***H	Emitter cable 8 wires Receiver cable 10 wires	

ЭйБиЭн www.abn.by

safety parameters

LS2ER/30-***_	015	030	045	060	075	090	105	120	135	150	165	180
height (mm)	160	310	460	610	760	910	1,060	1,210	1,360	1,510	1,660	1,810
number of beams	8	16	23	31	38	46	53	61	68	76	83	91
response time (ms)	4.5	6	8	10	11	13	14.5	16	17.5	19.5	21	22.5
response time Master + Slave (ms)	Ttot = [0.1104 * (Nr Slave1 + Nr Master) + 1.1044] * 2 (Master + 1 Slave)											
response time Master + 2 Slave (ms)	Ttot = [0.1104 * (Nr Slave1 + Nr Slave2 + Nr Master) + 1.3228] * 2 (Master + 2 Slave)											
Type (1)	2											
SIL(2)	1											
SILCL (3)	1											
PL (4)	c											
PFHd	2.04E-08	2.66E-08	3.30E-08	3.92E-08	4.57E-08	5.19E-08	5.83E-08	6.45E-08	7.09E-08	7.71E-08	8.35E-08	8.98E-08
DCavg	91.30%	91.00%	90.90%	90.70%	90.60%	90.60%	90.50%	90.50%	90.40%	90.40%	90.40%	90.30%
MTTFd (years)	100											
CFF	80%											

LS2ER/40-***_	015	030	045	060	075	090	105	120	135	150
height (mm)	160	310	460	610	760	910	1,060	1,210	1,360	1,510
number of beams	6	11	16	21	26	31	36	41	46	51
response time (ms)	4	5	6	7.5	8.5	9.5	10.5	11.5	13	14
response time Master + Slave (ms)	Ttot = [0.1104 * (Nr Slave1 + Nr Master) + 1.1044] * 2 (Master + 1 Slave)									
response time Master + 2 Slave (ms)	Ttot = [0.1104 * (Nr Slave1 + Nr Slave2 + Nr Master) + 1.3228] * 2 (Master + 2 Slave)									
Type (1)	2									
SIL(2)	1									
SILCL (3)	1									
PL (4)	c									
PFHd	1.83E-08	2.29E-08	2.73E-08	3.18E-08	3.63E-08	4.08E-08	4.53E-08	4.98E-08	5.43E-08	5.88E-08
DCavg	94.60%	93.80%	93.20%	92.80%	92.40%	92.20%	92.00%	91.80%	91.70%	91.50%
MTTFd (years)	100									
CFF	80%									

LS2ER/50-***_	015	030	045	060	075	090	105	120	135	150
height (mm)	160	310	460	610	760	910	1,060	1,210	1,360	1,510
number of beams	4	8	12	16	20	24	28	32	36	40
response time (ms)	3.5	4.5	5.5	6	7	8	9	10	10.5	11.5
response time Master + Slave (ms)	Ttot = [0.1104 * (Nr Slave1 + Nr Master) + 1.1044] * 2 (Master + 1 Slave)									
response time Master + 2 Slave (ms)	Ttot = [0.1104 * (Nr Slave1 + Nr Slave2 + Nr Master) + 1.3228] * 2 (Master + 2 Slave)									
Type (1)	2									
SIL(2)	1									
SILCL (3)	1									
PL (4)	c									
PFHd	1.75E-08	2.13E-08	2.47E-08	2.85E-08	3.19E-08	3.57E-08	3.91E-08	4.29E-08	4.63E-08	5.01E-08
DCavg	94.80%	94.00%	93.50%	93.10%	92.80%	92.50%	92.30%	92.10%	91.90%	91.80%
MTTFd (years)	100									
CFF	80%									

(1) ref. CEI EN 61496-1; CEI EN 61496-2 (2) ref. CEI EN 61508:2002 (3) ref. CEI EN 62061 + CEI EN 62061/EC2 (4) ref. UNI EN ISO 13849-1

safety parameters

LS2ER/90-***_	030	045	060	075	090	105	120	135	150
height (mm)	310	460	610	760	910	1.060	1.210	1.360	1.510
number of beams	4	6	8	10	12	14	16	18	20
response time (ms)	3.5	4	4.5	5	5.5	6	6	6.5	7
response time Master + Slave (ms)	Ttot = [0.1104 * (Nr Slave1 + Nr Master) + 1.1044] * 2 (Master + 1 Slave))								
response time Master + 2 Slave (ms)	Ttot = [0.1104 * (Nr Slave1 + Nr Slave2 + Nr Master) + 1.3228] * 2 (Master + 2 Slave)								
Type [1]	2								
SIL[2]	1								
SILCL [3]	1								
PL [4]	c								
PFHd	1.82E-08	2.05E-08	2.27E-08	2.50E-08	2.72E-08	2.95E-08	3.18E-08	3.41E-08	3.63E-08
DCavg	94.70%	94.20%	93.80%	93.50%	93.20%	93.00%	92.80%	92.60%	92.40%
MTTFd (years)	100								
CFF	80%								

LS2ER/**-***_	0A-050	0B-080	0C-090
height (mm)	500	800	900
number of beams	2	3	4
response time (ms)	3	3.5	3.5
response time Master + Slave (ms)	Ttot = [0.1104 * (Nr Slave1 + Nr Master) + 1.1044] * 2 (Master + 1 Slave)		
response time Master + 2 Slave (ms)	Ttot = [0.1104 * (Nr Slave1 + Nr Slave2 + Nr Master) + 1.3228] * 2 (Master + 2 Slave)		
Type [1]	2		
SIL[2]	1		
SILCL [3]	1		
PL [4]	c		
PFHd	1.71E-08	1.87E-08	2.02E-08
DCavg	94.90%	94.60%	94.20%
MTTFd (years)	100		
CFF	80%		

[1] ref. CEI EN 61496-1; CEI EN 61496-2 [2] ref. CEI EN 61508 [3] ref. CEI EN 62061 + CEI EN 62061/EC2 [4] ref. UNI EN ISO 13849-1

ЭйБиЭн www.abn.by

electrical diagrams of the connections

LS2 series receiver unit

M12
(8 poles male)

LS2ER / **-***
LS2ER / **-***M

pin	color	signal	type	description
1	WH	OSSD1	OUT	first safety static output (PNP)
2	BN	$24V_{DC}$	POWER	power supply input
3	GN	OSSD2	OUT	second safety static output (PNP)
4	YE	EDM	IN	connection to Restart and/or external control contacts (EDM)
5	GY	Mode_A	IN	selection of the Start/Restart/EDM mode
6	PK	Mode_B	IN	selection of the Start/Restart/EDM mode
7	BU	0V	POWER	supply voltage reference
8	RD	FE	GND	functional earth

8 poles cable

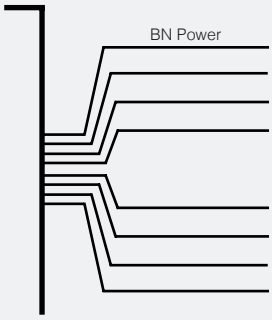

possible combinations

pin4 (YE)	pin5 (GY)	pin6 (RK)	function
$24V_{DC}$	$24V_{DC}$	0V	AUTO
K1 + K2 $+24V_{DC}$	$24V_{DC}$	0V	AUTO + EDM
restart $+24V_{DC}$	0V	$24V_{DC}$	MANUAL
K1 + K2 + restart $+24V_{DC}$	0V	$24V_{DC}$	MANUAL + EDM

BK	black	**OG**	orange
BN	brown	**GN**	green
RD	red	**BU**	blue
YE	yellow	**GY**	grey
WH	white	**VT**	violet
PK	pink		

NOTE: On these Standard and Master models it is possible to choose the operating modes by changing the wiring. By using the EDM function it is possible to extend the safety control to the contactors controlled downstream, that must be the type with guided contacts and approved for safety applications. With this model of curtain you can use the relay module SB300, but the EDM input must be connected.

M12
(5 poles male)

LS2ER / **-***B

pin	color	signal	type	description
1	BN	$24V_{DC}$	POWER	power supply input
2	WH	OSSD1	OUT	range or Test selection input
3	BU	0V	POWER	supply voltage reference
4	BK	OSSD2	OUT	range or Test selection input
5	GY	FE	GND	functional earth

NOTE: These Base models with automatic restart do not have the EDM function, the device downstream must therefore be able to control its own safety integrity independently.
With this model of curtain you can not use the relay module SB300, because the EDM input is not available.

electrical diagrams of the connections

10 poles cable
(IP69K with heater receiver unit)

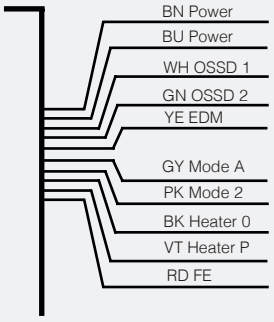

LS2ER / **-***H

color	signal	type	description
BN	$24V_{DC}$	POWER	power supply input
BU	0V	POWER	supply voltage reference
WH	OSSD1	OUT	first safety static output (PNP)
GN	OSSD2	OUT	second safety static output (PNP)
YE	EDM	IN	connection to Restart and/or external control contacts (EDM)
GY	Mode_A	IN	selection of the Start/Restart/EDM mode
PK	Mode_B	IN	selection of the Start/Restart/EDM mode
BK	Heater 0	POWER	heater supply common
PK	Heater p	POWER	heater supply 24V DC or AC
BK	FE	GND	functional earth

possible combinations

YE	GY	PK	function
$24V_{DC}$		0V	AUTO
K1 + K2 $+24V_{DC}$	$24V_{DC}$	0V	AUTO + EDM
restart $+24V_{DC}$	0V	$24V_{DC}$	MANUAL
K1 + K2 + restart $+24V_{DC}$	0V	$24V_{DC}$	MANUAL + EDM
x	0V		NOT ADMITTED
x	$24V_{DC}$		NOT ADMITTED

NOTE: On these Standard models it is possible to choose the operating modes by changing the wiring. By using the EDM function it is possible to extend the safety control to the contactors controlled downstream, that must be the type with guided contacts and approved for safety applications. The supply voltage of the thermostated heater can be indifferently 24VDC or 24VAC. With this model of curtain you can use the relay module SB300, but the EDM input must be connected.

LS2 series emitter unit

M12
(5 poles male connector)

LS2ER / **-***
LS2ER / **-***M

pin	color	signal	type	description
1	BN	POWER	OUT	power supply input
2	WH	IN	POWER	range or test selection input
3	BU	POWER	OUT	supply voltage reference
4	BK	IN		range or test selection input
5	GY	GND	IN	functional earth

5 poles cable

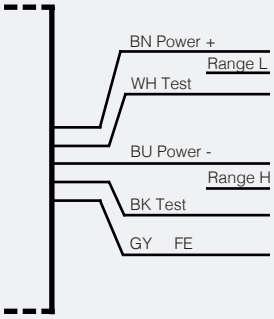

LS2ER / **-***K

possible combinations

pin2 (WH)	pin6 (BK)	function
LO		test
LO	HI	high range
HI	LO	low range
HI		not admitted
Levels: LO = < 5 V or open; HI = 11 to 30 V		

NOTE: The Test contact is necessary only if the safety chain of the receiver downstream must be periodically checked. If the Test is not necessary (the safety light curtain has already been tested independently) replace the contact with direct wiring at +24 V_{DC}.

ЭйБиЭн www.abn.by

LS2 series emitter IP68K with heater receiver unit

8 poles cable
(IP69K with heater receiver unit)

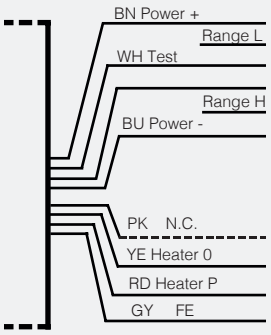

LS2ER / **-***H

color	signal	type	description
BN	$24V_{DC}$	POWER	power supply input
WH	Range L/Test	IN	range or test selection input
BU	0V	POWER	supply voltage reference
GN	Range H/Test	IN	range or test selection input
PK	not connected	N.C.	not connected
YE	heater 0	POWER	heater supply common
RD	heater P	POWER	heater supply 24V DC or AC
GY	FE	GND	functional earth

possible combinations

WH	GN	function
LO		test
LO	HI	high range
HI	LO	low range
HI		not admitted
Levels: LO = <5V or open; HI = 11 to 30V		

NOTE: The Test contact is necessary only if the safety chain of the receiver downstream must be periodically checked. If the Test is not necessary (the safety light curtain has already been tested independently) replace the contact with direct wiring at + 24 V_{DC}. The supply voltage of the thermostated heater can be indifferently 24 V_{DC} or 24 V_{AC}. The PK cable is not connected internally.

LS2 series emitter and receiver unit : master slave secondary connecotrs

M12
(5 poles male)

LS2ER / **-***M
LS2ER / **-***S
LS2ER / **-***F

pin	color	signal	type	description
1	BN	$24V_{DC}$	POWER	power supply (supply line for the upstream device)
2	WH	Line 1	IN/OUT	communication line 1
3	BU	0V	POWER	power supply reference (supply line for the upstream device)
4	BK	Line 2	IN/OUT	communication line 2
5	GY	FE	GND	functional earth

NOTE: Preferably use Female/Female pre-wired extension cables (it is not permitted to access the connection lines).

dimensions (mm)

Dimensions of Standard, Base, Final models; view of the base and head with relevant connectors; see Tab.:1 and 3

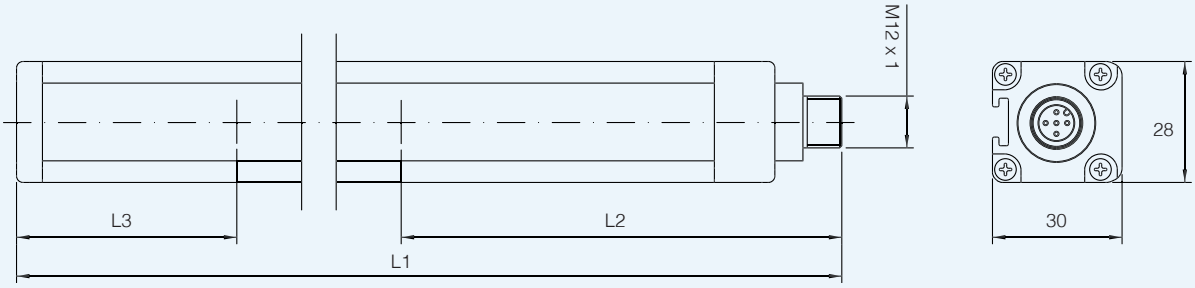

dimensions (mm)

Dimensions of Master and Slave models; view of the base and head with relevant connectors; see Tab.: 2 and 3 (mm)

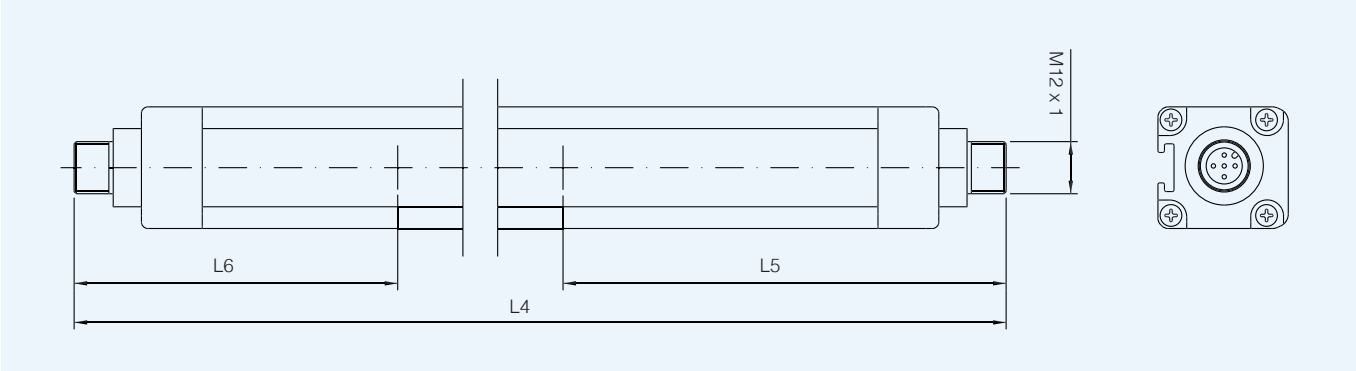

TAB.1

LS2 series		size models with rays terraced										
paired models		***										dimensions (mm)
		015	030	045	060	075	090	105	120	135	150	
LS2ER/**-*** LS2ER/**-***B LS2ER/**-***F	standard, base, final	213	363	513	663	813	963	1,113	1,263	1,413	1,563	L1
		61.5										L2 (bottom-most beam)
		11										L3 (top-most beam)
LS2ER/**-***M LS2ER/**-***S	master and slave	236.5	386.5	536.5	686.5	536.5	986.5	1,136.5	1,286.5	1,436.5	1,566.5	L4
		61.5										L5 (bottom-most beam)
		34.5										L6 (top-most beam)

TAB.2

LS2 series		size models with multiple beams			
paired models		***			dimensions (mm)
		0A-050	0B-080	0C-090	
LS2ER/**-*** LS2ER/**-***B LS2ER/**-***F	standard, base, final	653	953	1,053	L1
		102			L2 (bottom-most beam)
		51			L3 (top-most beam)
LS2ER/**-***M LS2ER/**-***S	master and slave	677	977	1,077	L4
		102			L5 (bottom-most beam)
		75			L6 (top-most beam)

TAB.3

LS2 series		termination types and connectors							
models		LS2R (receiver)				LS2R (emitter)			
		base view	connector	base view	connector	base view	connector	vista base	connector
LS2ER/**-***	standard	C	M12, 8p, M	A	-	B	M12, 5p, M	A	-
LS2ER/**-***B	base	B	M12, 5p, M	A	-	B	M12, 5p, M	A	-
LS2ER/**-***F	final	B (1)	M12, 5p, M	A	-	B (1)	M12, 5p, M	A	-
LS2ER/**-***M	master	F	M12, 8p, M	D (1)	M12, 5p, M	E	M12, 5p, M	D (1)	M12, 5p, M
LS2ER/**-***S	slave	E (1)	M12, 5p, M	D (1)	M12, 5p, M	E (1)	M12, 5p, M	D (1)	M12, 5p, M

NOTE: These connectors are dedicated to a communication BUS of the Master/ Slave chain, it is not permissible to access the lines, always use cord sets.

ЭйБиЭн www.abn.by

accessories

ST204* / outfit mounting accessories			
product	to used with	dimensions (mm)	description / installation
	LS2 series	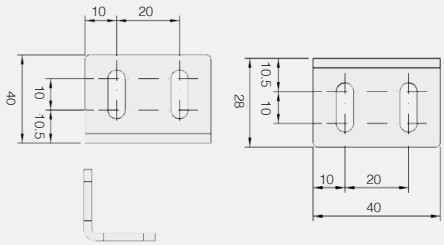	L Bracket Supplied as standard, 4 pieces to couple to the length from 300 to 1,050, 6 pieces for the length from 1,200 to 1,500.
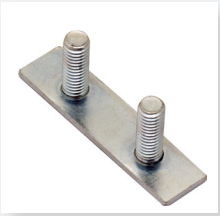	LS2 series	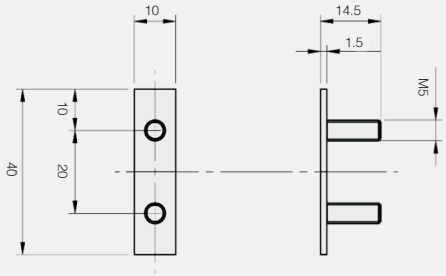	Insert with threaded bolts and nuts Supplied as standard, in a number corresponding to the brackets.

outfit brackets mounting

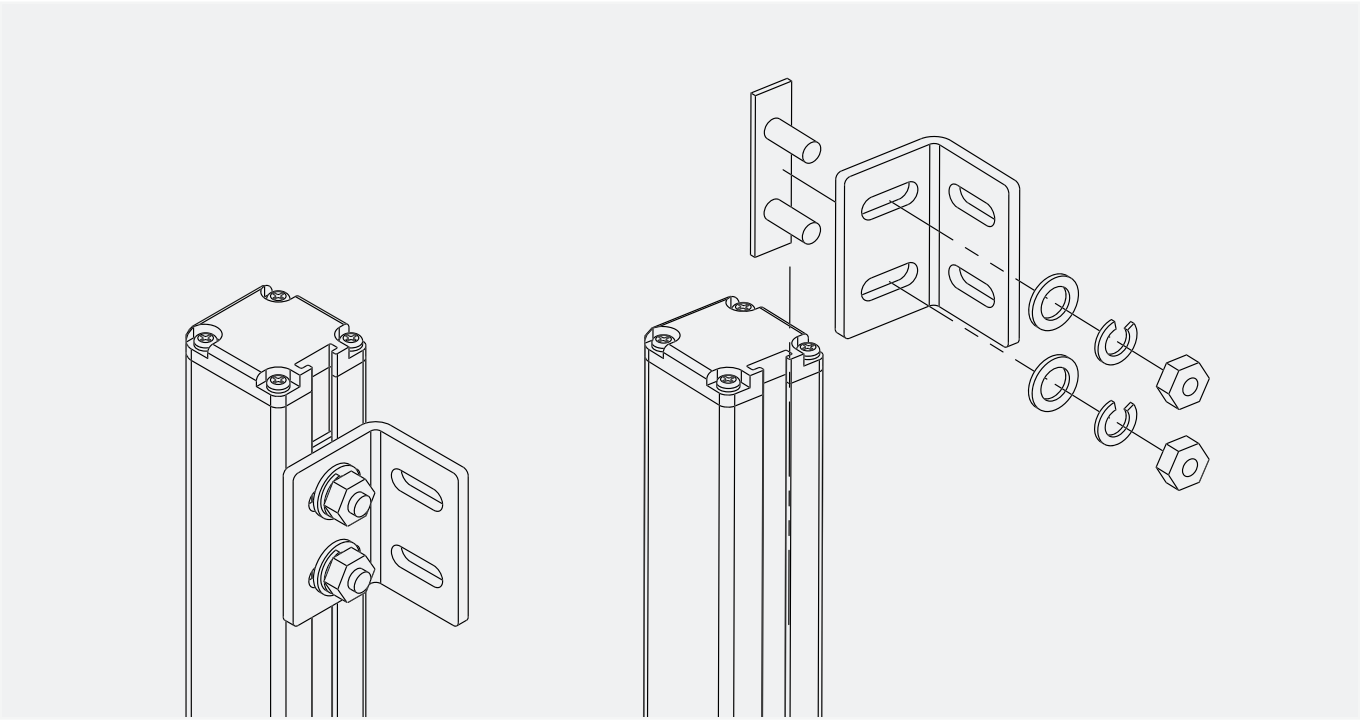

dimensions (mm)

IP69K models

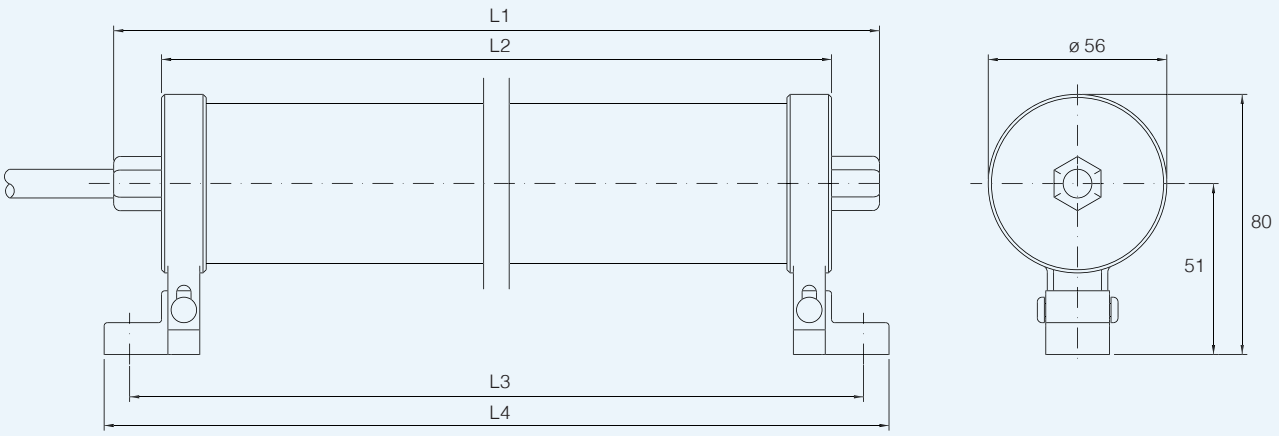

The light Curtain is supplied already fitted inside the transparent housing.
The power cord has a standard length of 10 meters and a maximum diameter of 6 mm. The brackets are included.

models	150	300	450	600	750	900	1,050	1,200	1,350	1,500	2B	3B	4B
L1 dimensions (mm)	320	470	620	770	920	1,070	1,220	1,370	1,520	1,670	760	1,060	1,160
L2 dimensions (mm)	290	440	620	740	890	1,040	1,190	1,340	1,490	1,640	730	1,030	1,130
L3 (± 3) dimensions (mm)	315	465	590	765	915	1,065	1,215	1,365	1,515	1,665	755	1,055	1,155
L4 dimensions (mm)	337	487	637	787	937	1,087	1,237	1,387	1,537	1,687	777	1,077	1,177

ЭйБиЭн www.abn.by

LS4, LS4_K, LS4_H series

Light Curtains

Type 4 according to IEC 61496-1 and IEC 61496-2

features

- Compact housing (28 x 30 mm) and no dead zone on cap side
- Resolution 14 mm for finger protection, 20, 30 , 40 mm for hand protection, 50, 90 mm for presence control and 2, 3, 4 beams for body protection/access control
- Controlled distance up to: 3, 4, 6, 10, 12 m
- Base, Standard versions and Master, Slave version to connect up to 3 sets in cascade configuration
- Selectable Automatic/Manual Restart and EDM integrated functions (Standard models)
- Selectable controlled distance
- IP69K protection models (LS4_K) and models with integrated heating system to reach -25°C operating temperature (LS4_H)
- Standard M12 da 5 and 8 poles connectors

web contents

- Application notes
- Photos
- Catalogue / Manuals

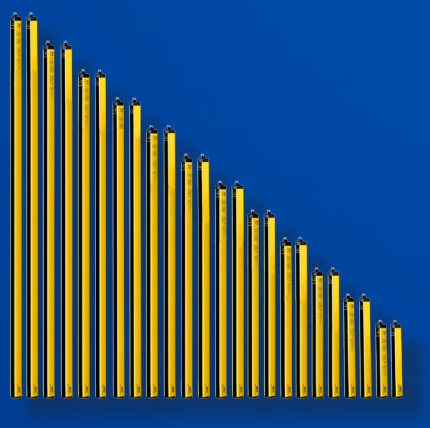

IP69K CE c UL us TÜV

code description

LS4 ER / 30 - 015

series	LS4	Type 4 safety light curtains 28 x 30 mm compact housing
E/R	ER	Emitter / Receiver couple
beams	14	Light grid, 14 mm resolution, finger protection
	20	Light grid, 20 mm resolution, hand protection
	30	Light grid, 30 mm resolution, hand protection
	40	Light grid, 40 mm resolution, hand protection
	50	Light grid, 50 mm resolution, presence control
	90	Light grid, 90 mm resolution, presence control
	0A	2 beams; body protection, 500 mm resolution
	0B	3 beams; body protection, 400 mm resolution
	0C	4 beams; body protection, 300 mm resolution
area	015 ÷ 180	Protected height from 150 to 1,800 mm (light grids)
	050 ÷ 090	Protected height 500, 800, 900 mm (multiple light beams)
model		Standard model with selectable MANUAL/AUTOMATIC Restart and EDM functions
	B	Base model with integrated AUTOMATIC Restart
	M	Master Model with selectable functions
	S	Intermediate Slave model
	F	Final Slave model
distance		Controlled distance
	L	Extended range
models		IP65 and IP67 protection, 10° ... 55 °C operating temperature
	K	Models in transparent cylindrical housing, IP69K, suitable for applications in the food industry. Resistance to washing with water at 100 bar, 80 ° C Housing in PMMA, caps in POM C with silicone seals. Brackets in stainless steel AISI 316L. Operating temperature -10 ... 55 ° C
	H	Models in transparent cylindrical casing, IP69K protection, thermostated, suitable for applications in the food industry. Resistance to washing with water at 100 bar, 80 ° C Housing in PMMA, POM C caps and silicone seals. Brackets in stainless steel AISI 316L. Operating temperature -25 ... 55 ° C

available models

14 mm resolution; 0...3 / 1...6 m controlled distance

protected height (mm)	n° of beams	response time (ms)	series
144	15	4	LS4ER/14-015B
			LS4ER/14-015
			LS4ER/14-015F
294	30	5.5	LS4ER/14-030B
			LS4ER/14-030
			LS4ER/14-030M
			LS4ER/14-030F
			LS4ER/14-030S
444	45	7.5	LS4ER/14-045B
			LS4ER/14-045
			LS4ER/14-045M
			LS4ER/14-045F
			LS4ER/14-045S
594	60	9	LS4ER/14-060B
			LS4ER/14-060
			LS4ER/14-060M
			LS4ER/14-060F
			LS4ER/14-060S
744	75	11	LS4ER/14-075B
			LS4ER/14-075
			LS4ER/14-075M
			LS4ER/14-075F
			LS4ER/14-075S
894	90	13	LS4ER/14-090B
			LS4ER/14-090
			LS4ER/14-090M
			LS4ER/14-090F
			LS4ER/14-090S
1,044	105	14.5	LS4ER/14-105B
			LS4ER/14-105
			LS4ER/14-105M
			LS4ER/14-105F
			LS4ER/14-105S
1,194	120	16.5	LS4ER/14-120B
			LS4ER/14-120
			LS4ER/14-120M
			LS4ER/14-120F
			LS4ER/14-120S
1,344	135	18	LS4ER/14-135B
			LS4ER/14-135
			LS4ER/14-135M
			LS4ER/14-135F
			LS4ER/14-135S
1,494	150	20	LS4ER/14-150B
			LS4ER/14-150
			LS4ER/14-150M
			LS4ER/14-150F
			LS4ER/14-150S

available models

20 mm resolution; 0...10 / 3...20 m controlled distance

protected height (mm)	n° of beams	response time (ms)	series
144	15	4	LS4ER/20-015BL
			LS4ER/20-015BL
294	30	5.5	LS4ER/20-030BL
			LS4ER/20-030L
444	45	7.5	LS4ER/20-045BL
			LS4ER/20-045L
594	60	9	LS4ER/20-060BL
			LS4ER/20-060L
744	75	11	LS4ER/20-075BL
			LS4ER/20-075L
894	90	13	LS4ER/20-090BL
			LS4ER/20-090L
1,044	105	14.5	LS4ER/20-105BL
			LS4ER/20-105L
1,194	120	16.5	LS4ER/120BL
			LS4ER/120L
1,344	135	18	LS4ER/135BL
			LS4ER/135L
1,494	150	20	LS4ER/150BL
			LS4ER/150L

available models

30 mm resolution; 0...4 / 0...12 m controlled distance

protected height (mm)	n° of beams	response time (ms)	series
160	8	4	LS4ER/30-015B
			LS4ER/30-015
			LS4ER/30-015F
310	16	5.5	LS4ER/30-030B
			LS4ER/30-030
			LS4ER/30-030M
			LS4ER/30-030F
			LS4ER/30-030S
460	23	7.5	LS4ER/30-045B
			LS4ER/30-045
			LS4ER/30-045M
			LS4ER/30-045F
			LS4ER/30-045S
610	31	9	LS4ER/30-060B
			LS4ER/30-060
			LS4ER/30-060M
			LS4ER/30-060F
			LS4ER/30-060S
760	38	10.5	LS4ER/30-075B
			LS4ER/30-075
			LS4ER/30-075M
			LS4ER/30-075F
			LS4ER/30-075S
910	46	12.5	LS4ER/30-090B
			LS4ER/30-090
			LS4ER/30-090M
			LS4ER/30-090F
			LS4ER/30-090S
1,060	53	14	LS4ER/30-105B
			LS4ER/30-105
			LS4ER/30-105M
			LS4ER/30-105F
			LS4ER/30-105S
1,210	61	15.5	LS4ER/30-120B
			LS4ER/30-120
			LS4ER/30-120M
			LS4ER/30-120F
			LS4ER/30-120S
1,360	68	17	LS4ER/30-135B
			LS4ER/30-135
			LS4ER/30-135M
			LS4ER/30-135F
			LS4ER/30-135S
1,510	76	19	LS4ER/30-150B
			LS4ER/30-150
			LS4ER/30-150M
			LS4ER/30-150F
			LS4ER/30-150S
1,660	83	20.5	LS4ER/30-165
1,810	91	22	LS4ER/30-180

available models

30 mm resolution; 0...10 / 0...20 m controlled distance

protected height (mm)	n° of beams	response time (ms)	series
160	8	3	LS4ER/30-015BL
			LS4ER/30-015L
310	16	4	LS4ER/30-030BL
			LS4ER/30-030L
460	23	5	LS4ER/30-045BL
			LS4ER/30-045L
610	31	6	LS4ER/30-060BL
			LS4ER/30-060L
760	38	6.5	LS4ER/30-075BL
			LS4ER/30-075L
910	46	7.5	LS4ER/30-090BL
			LS4ER/30-090L
1,060	53	8.5	LS4ER/30-105BL
			LS4ER/30-105L
1,210	61	9.5	LS4ER/30-120BL
			LS4ER/30-120L
1,360	68	10	LS4ER/30-135BL
			LS4ER/30-135L
1,510	76	11	LS4ER/30-150BL
			LS4ER/30-150L
1,660	83	12	LS4ER/30-165L
1,810	91	13	LS4ER/30-180L

available models

40 mm; 0...4 / 0...12 m controlled distance

protected height (mm)	n° of beams	response time (ms)	series
160	6	3.5	LS4ER/40-015B
			LS4ER/40-015
			LS4ER/40-015M
			LS4ER/40-015F
			LS4ER/40-015S
310	11	4.5	LS4ER/40-030B
			LS4ER/40-030
			LS4ER/40-030M
			LS4ER/40-030F
			LS4ER/40-030S
460	16	5.5	LS4ER/40-045B
			LS4ER/40-045
			LS4ER/40-045M
			LS4ER/40-045F
			LS4ER/40-045S

available models

40 mm resolution; 0...4 / 0...12 m controlled distance

protected height (mm)	n° of beams	response time (ms)	series
610	21	7	LS4ER/40-060B
			LS4ER/40-060
			LS4ER/40-060M
			LS4ER/40-060F
			LS4ER/40-060S
760	26	8	LS4ER/40-075B
			LS4ER/40-075
			LS4ER/40-075M
			LS4ER/40-075F
			LS4ER/40-075S
910	31	9	LS4ER/40-090B
			LS4ER/40-090
			LS4ER/40-090M
			LS4ER/40-090F
			LS4ER/40-090S
1,060	36	10	LS4ER/40-105B
			LS4ER/40-105
			LS4ER/40-105M
			LS4ER/40-105F
			LS4ER/40-105S
1,210	41	11	LS4ER/40-120B
			LS4ER/40-120
			LS4ER/40-120M
			LS4ER/40-120F
			LS4ER/40-120S
1,360	46	12.5	LS4ER/40-135B
			LS4ER/40-135
			LS4ER/40-135M
			LS4ER/40-135F
			LS4ER/40-135S
1,510	51	13.5	LS4ER/40-150B
			LS4ER/40-150
			LS4ER/40-150M
			LS4ER/40-150F
			LS4ER/40-150S

available models

40 mm resolution; 0...10 / 3...20 m controlled distance

protected height (mm)	n° of beams	response time (ms)	series
160	6	3	LS4ER/40-015BL
			LS4ER/40-015L
310	11	3.5	LS4ER/40-030BL
			LS4ER/40-030L
460	16	4	LS4ER/40-045BL
			LS4ER/40-045L
610	21	4.5	LS4ER/40-060BL
			LS4ER/40-060L
760	26	5	LS4ER/40-075BL
			LS4ER/40-075L
910	31	6	LS4ER/40-090BL
			LS4ER/40-090L
1,060	36	6.5	LS4ER/40-105BL
			LS4ER/40-105L
1,210	41	7	LS4ER/40-120BL
			LS4ER/40-120L
1,360	46	7.5	LS4ER/40-135BL
			LS4ER/40-135L
1,510	51	8	LS4ER/40-150BL
			LS4ER/40-150L

available models

50 mm resolution; 0...4 / 0...12 m controlled distance

protected height (mm)	n° of beams	response time (ms)	series
160	4	3	LS4ER/50-015B
			LS4ER/50-015
			LS4ER/50-015M
			LS4ER/50-015F
			LS4ER/50-015S
310	8	4	LS4ER/50-030B
			LS4ER/50-030
			LS4ER/50-030M
			LS4ER/50-030F
			LS4ER/50-030S

available models

50 mm resolution; 0...4 / 0...12 m controlled distance

protected height (mm)	n° of beams	response time (ms)	series
460	12	4.5	LS4ER/50-045B
			LS4ER/50-045
			LS4ER/50-045M
			LS4ER/50-045F
			LS4ER/50-045S
610	16	5.5	LS4ER/50-060B
			LS4ER/50-060
			LS4ER/50-060M
			LS4ER/50-060F
			LS4ER/50-060S
760	20	6.5	LS4ER/50-075B
			LS4ER/50-075
			LS4ER/50-075M
			LS4ER/50-075F
			LS4ER/50-075S
910	24	7.5	LS4ER/50-090B
			LS4ER/50-090
			LS4ER/50-090M
			LS4ER/50-090F
			LS4ER/50-090S
1,060	28	8.5	LS4ER/50-105B
			LS4ER/50-105
			LS4ER/50-105M
			LS4ER/50-105F
			LS4ER/50-105S
1,210	32	9.5	LS4ER/50-120B
			LS4ER/50-120
			LS4ER/50-120M
			LS4ER/50-120F
			LS4ER/50-120S
1,360	36	10	LS4ER/50-135B
			LS4ER/50-135
			LS4ER/50-135M
			LS4ER/50-135F
			LS4ER/50-135S
1,510	40	11	LS4ER/50-150B
			LS4ER/50-150
			LS4ER/50-150M
			LS4ER/50-150F
			LS4ER/50-150S

available models

50 mm resolution; 0...10 / 3...20 m controlled distance

protected height (mm)	n° of beams	response time (ms)	series
160	4	2.5	LS4ER/50-015BL
			LS4ER/50-015L
310	8	3	LS4ER/50-030BL
			LS4ER/50-030L
460	12	3.5	LS4ER/50-045BL
			LS4ER/50-045L
610	16	4	LS4ER/50-060BL
			LS4ER/50-060L
760	20	4.5	LS4ER/50-075BL
			LS4ER/50-075L
910	24	5	LS4ER/50-090BL
			LS4ER/50-090L
1,060	28	5.5	LS4ER/50-105BL
			LS4ER/50-105L
1,210	32	6	LS4ER/50-120BL
			LS4ER/50-120L
1,360	36	6.5	LS4ER/50-135BL
			LS4ER/50-135L
1,510	40	7	LS4ER/50-150BL
			LS4ER/50-150L

available models

90 mm resolution; 0...4 / 0...12 m controlled distance

protected height (mm)	n° of beams	response time (ms)	series
310	4	3	LS4ER/90-030B
			LS4ER/90-030
			LS4ER/90-030M
			LS4ER/90-030F
			LS4ER/90-030S
460	6	3.5	LS4ER/90-045B
			LS4ER/90-045
			LS4ER/90-045M
			LS4ER/90-045F
			LS4ER/90-045S
610	8	4	LS4ER/90-060B
			LS4ER/90-060
			LS4ER/90-060M
			LS4ER/90-060F
			LS4ER/90-060S

available models

90 mm resolution; 0...4 / 0...12 m controlled distance

protected height (mm)	n° of beams	response time (ms)	series
760	10	4.5	LS4ER/90-075B
			LS4ER/90-075
			LS4ER/90-075M
			LS4ER/90-075F
			LS4ER/90-075S
910	12	5	LS4ER/90-090B
			LS4ER/90-090
			LS4ER/90-090M
			LS4ER/90-090F
			LS4ER/90-090S
1,060	14	5.5	LS4ER/90-105B
			LS4ER/90-105
			LS4ER/90-105M
			LS4ER/90-105F
			LS4ER/90-105S
1,210	16	5.5	LS4ER/90-120B
			LS4ER/90-120
			LS4ER/90-120M
			LS4ER/90-120F
			LS4ER/90-120S
1,360	18	6	LS4ER/90-135B
			LS4ER/90-135
			LS4ER/90-135M
			LS4ER/90-135F
			LS4ER/90-135S
1,510	20	6.5	LS4ER/90-150B
			LS4ER/90-150
			LS4ER/90-150M
			LS4ER/90-150F
			LS4ER/90-150S

available models

90 mm resolution; 0...10 / 3...20 m controlled distance

protected height (mm)	n° of beams	response time (ms)	series
310	4	2.5	LS4ER/90-030BL
			LS4ER/90-030L
460	6	3	LS4ER/90-045BL
			LS4ER/90-045L
610	8	3	LS4ER/90-060BL
			LS4ER/90-060L
760	10	3.5	LS4ER/90-075BL
			LS4ER/90-075L
910	12	3.5	LS4ER/90-090BL
			LS4ER/90-090L
1,060	14	3.5	LS4ER/90-105BL
			LS4ER/90-105L
1,210	16	4	LS4ER/90-120BL
			LS4ER/90-120L
1,360	18	4	LS4ER/90-135BL
			LS4ER/90-135L
1,510	20	4.5	LS4ER/90-150BL
			LS4ER/90-150L

available models

resolution 2,3,4 beams; 0...4 / 0...12 m controlled distance

protected height (mm)	n° of beams	distance betw. beams (mm)	response time (ms)	series
510	2	500	2.5	LS4ER/0A-050B
				LS4ER/0A-050
				LS4ER/0A-050M
				LS4ER/0A-050F
				LS4ER/0A-050S
810	3	800	3	LS4ER/0B-080B
				LS4ER/0B-080
				LS4ER/0B-080M
				LS4ER/0B-080F
				LS4ER/0B-080S
910	4	900	3	LS4ER/0C-090B
				LS4ER/0C-090
				LS4ER/0C-090M
				LS4ER/0C-090F
				LS4ER/0C-090S

available models

resolution 2,3,4 beams; 0...10 / 3...20 m controlled distance

protected height (mm)	n° of beams	distance betw. beams (mm)	response time (ms)	series
510	2	500	2.5	LS4ER/0A-050BL
				LS4ER/0A-050L
810	3	800	2.5	LS4ER/0B-080BL
				LS4ER/0B-080L
910	4	900	2.5	LS4ER/0C-090BL
				LS4ER/0C-090L

available models

14 mm resolution; 0...3 / 1...5 m controlled distance

protected height (mm)	n° of beams	response time (ms)	series
144	15	4	LS4ER/14-015K
294	30	5.5	LS4ER/14-030K
444	45	7.5	LS4ER/14-045K
594	60	9	LS4ER/14-060K
744	75	11	LS4ER/14-075K
894	90	13	LS4ER/14-090K
1,044	105	14.5	LS4ER/14-105K
1,194	120	16.5	LS4ER/14-120K
1,344	135	18	LS4ER/14-135K
1,494	150	20	LS4ER/14-150K

available models

30 mm resolution; 0...8 / 3...17 m controlled distance

protected height (mm)	n° of beams	response time (ms)	series
160	8	3	LS4ER/30-015LK
310	16	4	LS4ER/30-030LK
460	23	5	LS4ER/30-045LK
610	31	6	LS4ER/30-060LK
760	38	6.5	LS4ER/30-075LK
910	46	7.5	LS4ER/30-090LK
1,060	53	8.5	LS4ER/30-105LK
1,210	61	9.5	LS4ER/30-120LK
1,360	68	10	LS4ER/30-135LK
1,510	76	11	LS4ER/30-150LK

available models

14 mm resolution; 0...3 / 1...5 m controlled distance

protected height (mm)	n° of beams	response time (ms)	series
144	15	4	LS4ER/14-015H
294	30	5.5	LS4ER/14-030H
444	45	7.5	LS4ER/14-045H
594	60	9	LS4ER/14-060H
744	75	11	LS4ER/14-075H
894	90	13	LS4ER/14-090H
1,044	105	14.5	LS4ER/14-105H
1,194	120	16.5	LS4ER/14-120H
1,344	135	18	LS4ER/14-135H
1,494	150	20	LS4ER/14-150H

available models

30 mm resolution; 0...8 / 3...17 m controlled distance

protected height (mm)	n° of beams	response time (ms)	serie
160	8	3	LS4ER/30-015LH
310	16	4	LS4ER/30-030LH
460	23	5	LS4ER/30-045LH
610	31	6	LS4ER/30-060LH
760	38	6.5	LS4ER/30-075LH
910	46	7.5	LS4ER/30-090LH
1,060	53	8.5	LS4ER/30-105LH
1,210	61	9.5	LS4ER/30-120LH
1,360	68	10	LS4ER/30-135LH
1,510	76	11	LS4ER/30-150LH

available models

resolution 2,3,4 beams; 0...10 / 3...17 m controlled distance

protected height (mm)	n° of beams	response time (ms)	series
510	2	2.5	LS4ER/0A-050LK
810	3		LS4ER/0B-080LK
910	4		LS4ER/0C-090LK

available models

resolution 2,3,4 beams; 0...10 / 3...17 m controlled distance

protected height (mm)	n° of beams	response time (ms)	series
510	2	2.5	LS4ER/0A-050LH
810	3		LS4ER/0B-080LH
910	4		LS4ER/0C-090LH

technical specifications

	LS4ER/**-***_	
operating voltage	19.2...28.8	PELV power supplier according to EN 60204-1 Cap. 6.4
power consumption, Receiver	2 W	no load
power consumption, Emitter	1 W	
power consumption, heater	2...10 W	H models, IP69K with heater
output type	2 x PNP	OSSD safety outputs
output current	400 mA	higher values are considered overload
equivalent resistive load	60 Ω	lower values are considered short circuit
capacitive load	0.82 µF	lower values may be considered short circuit
recovery time	2 s	
response time	2.5...20 ms	
effective aperture angle	≤ ± 2.5°	IEC 61496-1
artificial light rejection	according to IEC 61496-2	according to the reported standards
ambient light rejection	according to IEC 61496-2	
IP mechanical protection (standard models)	IP65 e IP67	without any additional precaution the device can't be used for outdoor applications
IP mechanical protection (special models)	IP65, IP67 and IP69K	external transparent tube resistant against 100 bar water jets
operating temperature	-10...+55°C	no condensation
operating temperature, K models	-10...+55°C	no condensation, models without internal heater
operating temperature, H models	-25...+55°C	models with internal heater
storage temperature	-25...+70°C	to be respected also during transportation
humidity	95%	no condensation
vibrations	according to IEC 61496-1	according to the reported standards
shocks	according to IEC 61496-1	
cable length (power supply/outputs)	100 m	cable section 0.34 mm² (to respect max length)
max cable legth for Master Slave interconnections	50 m	
dimension (IP67 models)	28 (front) x 30 mm	painted aluminium RAL 1012
tube (IP69K models)	ø 56 mm	
connectors models LS4ER/**-***B	Emitter 1 x M12, 5p, male Receiver 1 x M12, 5p male	nichel plated brass
connectors models LS4ER/**-***	Emitter 1 x M12, 5p, male Receiver 1 x M12, 8p male	
connectors models LS4ER/**-***M	Emitter 2 x M12, 5p, male Receiver 1 x M12, 8p male + 1 x M12, 5p male	
connectors models LS4ER/**-***S	Emitter 2 x M12, 5p, male Receiver 2 x M12, 5p male	
connectors models LS4ER/**-***F	Emitter 1 x M12, 5p, male Receiver 1 x M12, 5p male	
connectors models LS4ER/**-***K	Emitter 5 wires Receiver 8 wires	PVC sheath, ø 5.5 mm L 10 m, 0.34 mm²
connectors models LS4ER/**-***H	Emitter 8 wires Receiver10 wires	

safety parameters

LS4ER/14-***_	015	030	045	060	075	090	105	120	135	150
height (mm)	160	310	460	610	760	910	1,060	1,210	1,360	1,510
number of beams	15	30	45	60	75	90	105	120	135	150
response time (ms)	4	5.5	7.5	9	11	13	14.5	16.5	18	20
response time Master + Slave (ms)	Ttot = [0.06 * (Nr Slave1 + Nr Master) + 0.9636] * 2 (Master + 1 Slave)									
response time Master + 2 Slave (ms)	Ttot = [0.06 * (Nr Slave1 + Nr Slave2 + Nr Master) + 1.0036] * 2 (Master + 2 Slave)									
Type (1)	4									
SIL(2)	3									
SILCL (3)	3									
PL (4)	e									
PFHd	1.03E-08	1.27E-08	1.52E-08	1.75E-08	2.00E-08	2.24E-08	2.49E-08	2.73E-08	2.98E-08	3.22E-08
DCavg	95.40%	94.90%	94.50%	94.10%	93.80%	93.60%	93.30%	93.10%	92.90%	92.80%
MTTFd	100									
CFF	80%									

LS4ER/30-***_	015	030	045	060	075	090	105	120	135	150	165	180
height (mm)	160	310	460	610	760	910	1,060	1,210	1,360	1,510	1,660	1,810
number of beams	8	16	23	31	38	46	53	61	68	76	83	91
response time (ms)	4	5.5	7.5	9	10.5	12.5	14	15.5	17	19	20.5	22
response time Master + Slave (ms)	Ttot = [0.11 * (Nr Slave1 + Nr Master) + 0.9376] * 2 (Master + 1 Slave)											
response time Master + 2 Slave (ms)	Ttot = [0.11 * (Nr Slave1 + Nr Slave2 + Nr Master) + 1.0508] * 2 (Master + 2 Slave)											
Type (1)	4											
SIL(2)	3											
SILCL (3)	3											
PL (4)	e											
PFHd	7.08E-09	8.20E-09	9.45E-09	1.06E-08	1.19E-08	1.30E-08	1.43E-08	1.54E-08	1.67E-08	1.78E-08	1.90E-08	2.02E-08
DCavg	96.60%	97.00%	97.20%	97.30%	97.40%	97.50%	97.70%	97.60%	97.70%	97.70%	97.70%	97.80%
MTTFd	100											
CFF	80%											

LS4ER/40-***_	015	030	045	060	075	090	105	120	135	150
height (mm)	160	310	460	610	760	910	1,060	1,210	1,360	1,510
number of beams	6	11	16	21	26	31	36	41	46	51
response time (ms)	3.5	4.5	5.5	7	8	9	10	11	12.5	13.5
response time Master + Slave (ms)	Ttot = [0.11 * (Nr Slave1 + Nr Master) + 0.9376] * 2 (Master + 1 Slave)									
response time Master + 2 Slave (ms)	Ttot = [0.11 * (Nr Slave1 + Nr Slave2 + Nr Master) + 1.0508] * 2 (Master + 2 Slave)									
Type (1)	4									
SIL(2)	3									
SILCL (3)	3									
PL (4)	e									
PFHd	6.82E-09	7.76E-09	8.58E-09	9.52E-09	1.03E-08	1.13E-08	1.21E-08	1.30E-08	1.38E-08	1.48E-08
DCavg	96.40%	96.70%	96.90%	97.10%	97.20%	97.30%	97.40%	97.40%	97.50%	97.50%
MTTFd	100									
CFF	80%									

(1) ref. CEI EN 61496-1; CEI EN 61496-2 (2) ref. CEI EN 61508 (3) ref. CEI EN 62061 + CEI EN 62061/EC2 (4) ref. UNI EN ISO 13849-1

safety parameters

LS4ER/50-***_	015	030	045	060	075	090	105	120	135	150
height (mm)	160	310	460	610	760	910	1,060	1,210	1,360	1,510
number of beams	4	8	12	16	20	24	28	32	36	40
response time (ms)	3	4	4.5	5.5	6.5	7.5	8.5	9	10	11
response time Master + Slave (ms)	Ttot = [0.11 * (Nr Slave1 + Nr Master) + 0.9376] * 2 (Master + 1 Slave)									
response time Master + 2 Slave (ms)	Ttot = [0.11 * (Nr Slave1 + Nr Slave2 + Nr Master) + 1.0508] * 2 (Master + 2 Slave)									
Type [1]	4									
SIL[2]	3									
SILCL [3]	3									
PL [4]	e									
PFHd	6.53E-09	7.16E-09	7.85E-09	8.48E-09	9.17E-08	9.80E-08	1.05E-08	1.11E-08	1.18E-08	1.24E-08
DCavg	96.50%	96.80%	96.90%	97.10%	97.20%	97.30%	97.40%	97.50%	97.50%	97.50%
MTTFd	100									
CFF	80%									

LS4ER/90-***_	030	045	060	075	090	105	120	135	150
height (mm)	310	460	610	760	910	1,060	1,210	1,360	1,510
number of beams	4	6	8	10	10	12	14	16	20
response time (ms)	3	3.5	4	4.5	4.5	5	5.5	5.5	6.5
response time Master + Slave (ms)	Ttot = [0.11 * (Nr Slave1 + Nr Master) + 0.9376] * 2 (Master + 1 Slave)								
response time Master + 2 Slave (ms)	Ttot = [0.11 * (Nr Slave1 + Nr Slave2 + Nr Master) + 1.0508] * 2 (Master + 2 Slave)								
Type [1]	4								
SIL[2]	3								
SILCL [3]	3								
PL [4]	e								
PFHd	6.79E-09	7.16E-09	7.85E-09	8,48E-09	9,17E-08	9,80E-08	1,05E-08	1,11E-08	1,18E-08
DCavg	96.50%	96.60%	96.70%	96.80%	96.90%	96.90%	97.00%	97.10%	97.10%
MTTFd	100								
CFF	80%								

LS4ER/**-***_	0A-050	0B-080	0C-090
height (mm)	500	800	900
number of beams	2	3	4
response time (ms)	2,5	3	3
response time Master + Slave (ms)	Ttot = [0.11 * (Nr Slave1 + Nr Master) + 0.9376] * 2 (Master + 1 Slave)		
response time Master + 2 Slave (ms)	Ttot = [0.11 * (Nr Slave1 + Nr Slave2 + Nr Master) + 1.0508] * 2 (Master + 2 Slave)		
Type [1]	4		
SIL[2]	3		
SILCL [3]	3		
PL [4]	e		
PFHd	6.89E-09	7.55E-08	8.21E-08
DCavg	96.20%	96.20%	96.10%
MTTFd	100		
CFF	80%		

[1] ref. CEI EN 61496-1; CEI EN 61496-2 [2] ref. CEI EN 61508 [3] ref. CEI EN 62061 + CEI EN 62061/EC2 [4] ref. UNI EN ISO 13849-1

LS4ER/20-***_L	015	030	045	060	075	090	105	120	135	150
height (mm)	160	310	460	610	760	910	1,060	1,210	1,360	1,510
number of beams	15	30	45	60	75	90	105	120	135	150
response time (ms)	4	5.5	7.5	9	11	13	14.5	16.5	18	20
response time Master + Slave (ms)	Ttot = [0.06 * (Nr Slave1 + Nr Master) + 0.9636] * 2 (Master + 1 Slave)									
response time Master + 2 Slave (ms)	Ttot = [0.06 * (Nr Slave1 + Nr Slave2 + Nr Master) + 1.0036] * 2 (Master + 2 Slave)									
Type [1]	4									
SIL [2]	3									
SILCL [3]	3									
PL [4]	e									
PFHd	1.03E-08	1.27E-08	1.52E-08	1.75E-08	2.00E-08	2.24E-08	2.49E-08	2.73E-08	2.98E-08	3.22E-08
DCavg	95.40%	94.90%	94.50%	94.10%	93.80%	93.60%	93.30%	93.10%	92.90%	92.80%
MTTFd	100									
CFF	80%									

LS4ER/30-***_	015	030	045	060	075	090	105	120	135	150	165	180
height (mm)	160	310	460	610	760	910	1,060	1,210	1,360	1,510	1,660	1,810
number of beams	8	16	23	31	38	46	53	61	68	76	83	91
response time (ms)	3	4	5	6	6.5	7.5	8.5	9.5	10	11	12	13
response time Master + Slave (ms)	Ttot = [0.06 * (Nr Slave1 + Nr Master) + 0.9636] * 2 (Master + 1 Slave)											
response time Master + 2 Slave (ms)	Ttot = [0.06 * (Nr Slave1 + Nr Slave2 + Nr Master) + 1.0036] * 2 (Master + 2 Slave)											
Type [1]	4											
SIL [2]	3											
SILCL [3]	3											
PL [4]	e											
PFHd	9.13E-09	1.04E-08	1.16E-08	1.28E-08	1.41E-08	1.53E-08	1.66E-08	1.78E-08	1.91E-08	2.03E-08	2.16E-09	2.29E-08
DCavg	95.70%	95.40%	95.10%	94.90%	94.70%	94.50%	94.30%	94.10%	93.90%	93.80%	93.70%	93.60%
MTTFd	100											
CFF	80%											

LS4ER/40-***_L	015	030	045	060	075	090	105	120	135	150
height	160	310	460	610	760	910	1,060	1,210	1,360	1,510
number of beams	6	11	16	21	26	31	36	41	46	51
response time (ms)	3	3,5	4	4.5	5	6	6.5	7	7.5	8
response time Master + Slave (ms)	Ttot = [0.06 * (Nr Slave1 + Nr Master) + 0.9636] * 2 (Master + 1 Slave))									
response time Master + 2 Slave (ms)	Ttot = [0.06 * (Nr Slave1 + Nr Slave2 + Nr Master) + 1.0036] * 2 (Master + 2 Slave)									
Type [1]	4									
SIL [2]	3									
SILCL [3]	3									
PL [4]	e									
PFHd	8.84E-09	9.85E-09	1.06E-09	1.16E-09	1.23E-08	1.34E-08	1.41E-08	1.51E-08	1.59E-08	1.69E-08
DCavg	95.80%	95.50%	95.30%	95.10%	95.00%	94.80%	94.70%	94.50%	94.40%	94.20%
MTTFd	100									
CFF	80%									

[1] ref. CEI EN 61496-1; CEI EN 61496-2 [2] ref. CEI EN 61508 [3] ref. CEI EN 62061 + CEI EN 62061/EC2 [4] ref. UNI EN ISO 13849-1

safety parameters

LS4ER/50-***_L	015	030	045	060	075	090	105	120	135	150
height (mm)	160	310	460	610	760	910	1,060	1,210	1,360	1,510
number of beams	4	8	12	16	20	24	28	32	36	40
response time (ms)	2.5	3	3.5	4	4.5	5	5.5	6	6.5	7
response time Master + Slave (ms)	Ttot = [0.06 * (Nr Slave1 + Nr Master) + 0.9636] * 2 (Master + 1 Slave))									
response time Master + 2 Slave (ms)	Ttot = [0.06 * (Nr Slave1 + Nr Slave2 + Nr Master) + 1.0036] * 2 (Master + 2 Slave)									
Type [1]	4									
SIL [2]	3									
SILCL [3]	3									
PL [4]	e									
PFHd	8.50E-09	9.11E-09	9.82E-09	1.4E-09	1.11E-08	1.18E-08	1.25E-08	1.31E-08	1.38E-08	1.44E-08
DCavg	95.90%	95.70%	95.50%	95.40%	95.20%	95.10%	94.90%	94.80%	94.70%	94.60%
MTTFd	100									
CFF	80%									

LS4ER/90-***_L	030	045	060	075	090	105	120	135	150
height (mm)	310	460	610	760	910	1,060	1,210	1,360	1,510
number of beams	4	6	8	10	12	14	16	18	20
response time (ms)	2.5	3	3	3.5	3.5	3.5	4	4	4.5
response time Master + Slave (ms)	Ttot = [0.06 * (Nr Slave1 + Nr Master) + 0.9636] * 2 (Master + 1 Slave))								
response time Master + 2 Slave (ms)	Ttot = [0.06 * (Nr Slave1 + Nr Slave2 + Nr Master) + 1.0036] * 2 (Master + 2 Slave)								
Type [1]	4								
SIL [2]	3								
SILCL [3]	3								
PL [4]	e								
PFHd	8.71E-09	9.23E-09	9.64E-09	1.02E-09	1.06E-08	1.11E-08	1.20E-08	1.31E-08	1.24E-08
DCavg	95.80%	95.70%	95.60%	95.40%	95.30%	95.10%	95.00%	94.80%	95.00%
MTTFd	100								
CFF	80%								

LS4ER/**-***_L	0A-050	0B-080	0C-090
height (mm)	500	800	900
number of beams	2	3	4
response time (ms)	2.5	2.5	2.5
response time Master + Slave (ms)	Ttot = [0.06 * (Nr Slave1 + Nr Master) + 0.9636] * 2 (Master + 1 Slave)		
response time Master + 2 Slave (ms)	Ttot = [0.06 * (Nr Slave1 + Nr Slave2 + Nr Master) + 1.0036] * 2 (Master + 2 Slave)		
Type [1]	4		
SIL [2]	3		
SILCL [3]	3		
PL [4]	e		
PFHd	9.15E-09	9.99E-09	1.08E-08
DCavg	95.80%	95.60%	95.40%
MTTFd	100		
CFF	80%		

[1] ref. CEI EN 61496-1; CEI EN 61496-2 [2] ref. CEI EN 61508 [3] ref. CEI EN 62061 + CEI EN 62061/EC2 [4] ref. UNI EN ISO 13849-1

electrical diagrams of the connections

LS4 series receiver

M12
(8 poles male)

LS4ER / **-***
LS4ER / **-***M

pin	color	signal	type	description
1	WH	OSSD1	OUT	first safety static output (PNP)
2	BN	$24V_{DC}$	POWER	power supply input
3	GN	OSSD2	OUT	second safety static output (PNP)
4	YE	EDM	IN	connection to Restart and/or external control contacts (EDM)
5	GY	Mode_A	IN	selection of the Start/Restart/EDM mode
6	PK	Mode_B	IN	selection of the Start/Restart/EDM mode
7	BU	0V	POWER	supply voltage reference
8	RD	FE	GND	functional earth

8 poles male

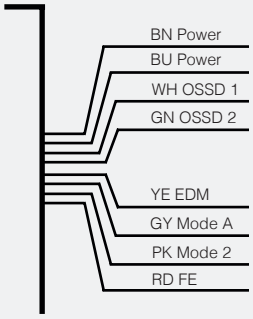

LS4ER / **-***K

possible combinations

pin4 (YE)	pin5 (GY)	pin6 (RK)	function
$24V_{DC}$	$24V_{DC}$	0V	AUTO
K1 + K2 $+24V_{DC}$	$24V_{DC}$	0V	AUTO + EDM
restart $+24V_{DC}$	0V	$24V_{DC}$	MANUAL
K1 + K2 + restart $+24V_{DC}$	0V	$24V_{DC}$	MANUAL + EDM

BK	black	OG	orange
BN	brown	GN	green
RD	red	BU	blue
YE	yellow	GY	grey
WH	white	VT	violet
PK	pink		

NOTE: On these Standard and Master models it is possible to choose the operating modes by changing the wiring. By using the EDM function it is possible to extend the safety control to the contactors controlled downstream, that must be the type with guided contacts and approved for safety applications.
With this model of curtain you can use the relay module SB300, but the EDM input must be connected.

M12
(5 poles male)

LS4ER / **-***B

pin	color	signal	type	description
1	BN	$24V_{DC}$	POWER	power supply input
2	WH	OSSD1	OUT	first safety static output (PNP)
3	BU	0V	POWER	supply voltage reference
4	BK	OSSD2	OUT	second safety static output (PNP)
5	GY	FE	GND	functional earth

NOTE: These Base models with automatic restart do not have the EDM function, the device downstream must therefore be able to control its own safety integrity independently. With this model of curtain you can not use the relay module SB300, because the EDM input is not available.

electrical diagrams of the connections

LS4 series receiver

10 poles cable
(IP69K with heater receiver unit)

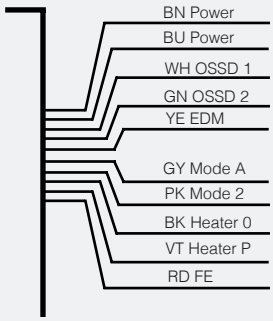

LS4ER / **-***H

color	signal	type	description
BN	$24V_{DC}$	POWER	power supply input
BU	0v	POWER	supply voltage reference
WH	OSSD1	OUT	first safety static output (PNP)
GN	OSSD2	OUT	second safety static output (PNP)
YE	EDM	IN	connection to restart and/or external control contacts (EDM)
GY	Mode_A	IN	selection of the Start/Restart/EDM mode
PK	Mode_B	IN	selection of the Start/Restart/EDM mode
BK	Heater 0	POWER	heater supply common
PK	Heater p	POWER	heater supply 24V DC or AC
BK	FE	GND	functional earth

possible combinations

YE	GY	PK	function
$24V_{DC}$	$24V_{DC}$	0V	AUTO
K1 + K2 $+24V_{DC}$	$24V_{DC}$	0V	AUTO + EDM
restart $+24V_{DC}$	0V	$24V_{DC}$	MANUAL
K1 + K2 + restart $+24V_{DC}$	0V	$24V_{DC}$	MANUAL + EDM
x	0V	0V	NOT ADMITTED
x	$24V_{DC}$	$24V_{DC}$	NOT ADMITTED

black	orange
brown	green
red	blue
yellow	grey
white	violet
pink	

NOTE: On these Standard models it is possible to choose the operating modes by changing the wiring. By using the EDM function it is possible to extend the safety control to the contactors controlled downstream, that must be the type with guided contacts and approved for safety applications. The supply voltage of the thermostated heater can be indifferently 24 V_{DC} or 24 V_{AC}. With this model of curtain you can use the relay module SB300, but the EDM input must be connected.

LS4 series emitter unit

M12
(5 poles male connector)

LS4ER / **-***
LS4ER / **-***M

pin	color	signal	type	description
1	BN	POWER	OUT	power supply input
2	WH	IN	POWER	range or test selection input
3	BU	POWER	OUT	supply voltage reference
4	BK	IN	IN	range or test selection input
5	GY	IN	IN	functional earth

5 poles cable

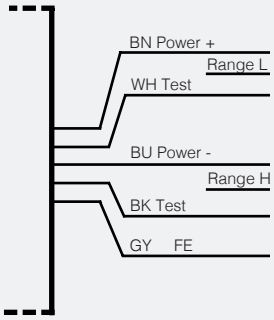

LS4ER / **-***K

possible combinations

pin2 (WH)	pin6 (BK)	function
LO	LO	test
LO	HI	high range
HI	LO	low range
HI	HI	NOT ADMITTED
Levels: LO = < 5V or open; HI = 11 to 30V		

black	orange
brown	green
red	blue
yellow	grey
white	violet
pink	

NOTE: The Test contact is necessary only if the safety chain of the receiver downstream must be periodically checked. If the Test is not necessary (the safety light curtain has already been tested independently) replace the contact with direct wiring at +24 V_{DC}.

LS4 series IP69K with heater Emitter unit

8 poles cable
(IP69K with heater emitter unit)

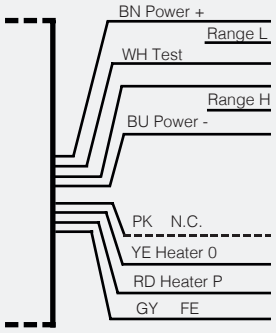

LS4ER / **-***H

color	signal	type	description
BN	24_{CC}	POWER	power supply input
WH	Range L/Test	IN	range or test selection input
BU	0V	POWER	supply voltage reference
GN	Range H/Test	IN	range or test selection input
PK	not connected	N.C.	not connected
YE	heater 0	POWER	heater supply common
RD	heater P	POWER	heater supply 24V DC or AC
GY	FE	GND	functional earth

possible combinations

WH	GN	function
LO	LO	test
LO	HI	high range
HI	LO	low range
HI	HI	not admitted
levels: LO = <5V or open; HI = 11 to 30V		

BK	black	OG	orange
BN	brown	GN	green
RD	red	BU	blue
YE	yellow	GY	grey
WH	white	VT	violet
PK	pink		

NOTE The Test contact is necessary only if the safety chain of the receiver downstream must be periodically checked. If the Test is not necessary (the safety light curtain has already been tested independently) replace the contact with direct wiring at +24VDC. The supply voltage of the thermostated heater can be indifferently 24 V_{DC} or 24 V_{AC}. The PK cable is not connected internally

LS4 series emitter and receiver unit : master slave secondary connectors

M12
(5 poles male)

LS4ER / **-***M
LS4ER / **-***S
LS4ER / **-***F

pin	color	signal	type	description
1	BN	$24V_{CC}$	POWER	power supply (supply line for the upstream device)
2	WH	Line 1	IN/OUT	communication line 1
3	BU	0V	POWER	power supply reference (supply line for the upstream device)
4	BK	Line 2	IN/OUT	communication line 2
5	GY	FE	GND	functional earth

NOTE: Preferably use Female/Female pre-wired extension cables (it is not permitted to access the connection lines).

dimensions (mm)

dimensions of Standard, Base, Final models; view of the base and head with relevant connectors; see Tab.: 1 and 3

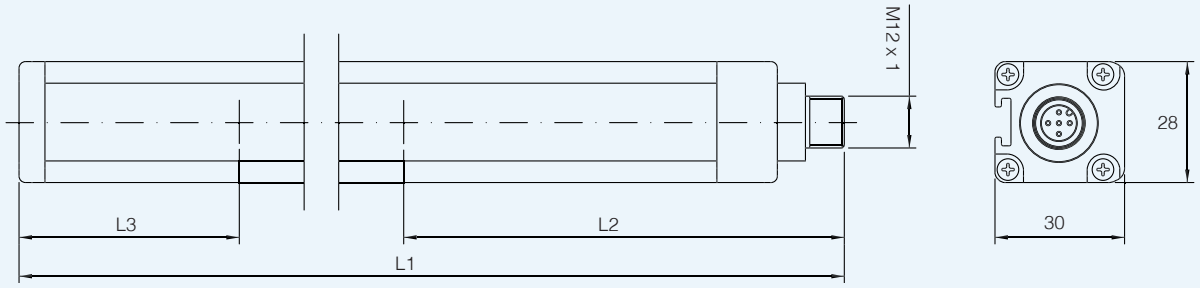

dimensions (mm)

Dimensions of Master and Slave models; view of the base and head with relevant connectors; see Tab.: 2 and 3

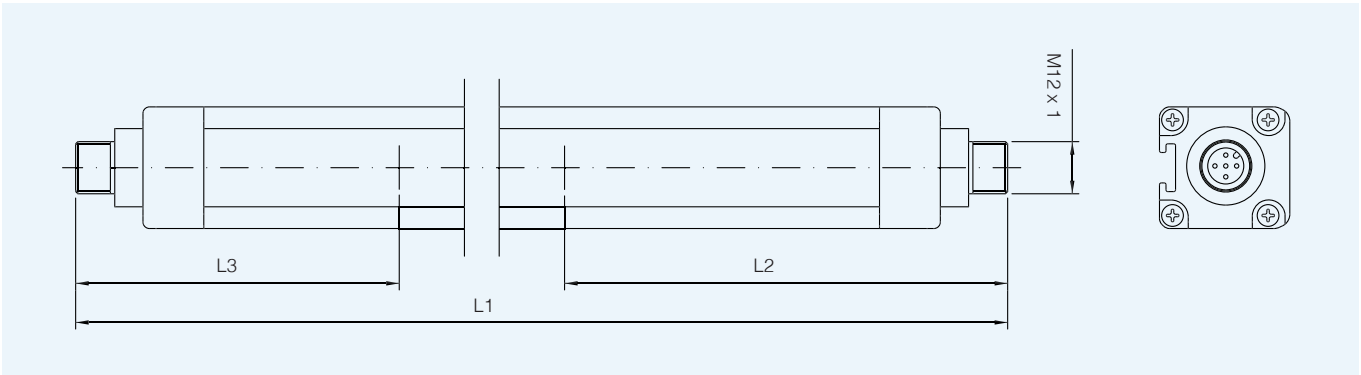

TAB.1

LS4 series												
paired models		***										dimensions (mm)
		015	030	045	060	075	090	105	120	135	150	
LS4ER/**-*** LS4ER/**-***B LS4ER/**-***F	standard, base, final	213	363	513	663	813	963	1,113	1,263	1,413	1,563	L1
		61,5										L2 (bottom-most beam)
		11										L3 (top-most beam)
LS4ER/**-***M LS4ER/**-***S	master and slave	236.5	386.5	536.5	686.5	536.5	986.5	1,136.5	1,286.5	1,436.5	1,566.5	L4
		61.5										L5 (bottom-most beam)
		34.5										L6 (top-most beam)

TAB.2

LS4 series					
paired models		***			dimensions (mm)
		0A-050	0B-080	0C-090	
LS4ER/**-*** LS4ER/**-***B LS4ER/**-***F	standard, base, final	653	953	1,053	L1
		102			L2 (bottom-most beam)
		51			L3 (top-most beam)
LS4ER/**-***M LS4ER/**-***S	master and slave	677	977	1,077	L4
		102			L5 (bottom-most beam)
		75			L6 (top-most beam)

TAB.3

LS4 series									
models		LS4R (receiver)				LS4R (emitter)			
		base view	connector	base view	connector	base view	connector	base view	connector
LS4ER/**-***	standard	C	M12, 8p, M	A	-	B	M12, 5p, M	A	-
LS4ER/**-***B	base	B	M12, 5p, M	A	-	B	M12, 5p, M	A	-
LS4ER/**-***F	final	B (1)	M12, 5p, M	A	-	B (1)	M12, 5p, M	A	-
LS4ER/**-***M	master	F	M12, 8p, M	D (1)	M12, 5p, M	E	M12, 5p, M	D (1)	M12, 5p, M
LS4ER/**-***S	slave	E (1)	M12, 5p, M	D (1)	M12, 5p, M	E (1)	M12, 5p, M	D (1)	M12, 5p, M

NOTE: These connectors are dedicated to a communication BUS of the Master/ Slave chain, it is not permissible to access the lines, always use cord sets.

accessories

ST204* / outfit mounting accessories			
product	to used with	dimensions (mm)	description / installation
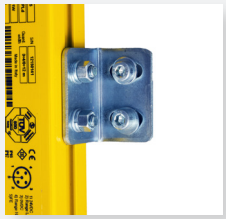	LS4 series	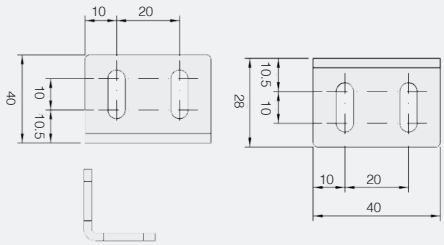	L Bracket Supplied as standard, 4 pieces to couple to the length from 300 to 1,050, 6 pieces for the length from 1,200 to 1,500.
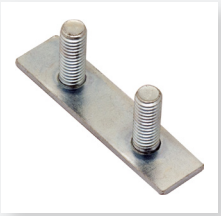	LS4 series	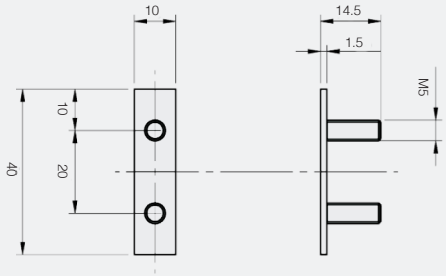	Insert with threaded bolts and nuts Supplied as standard, in a number corresponding to the brackets.

outfit brackets mounting

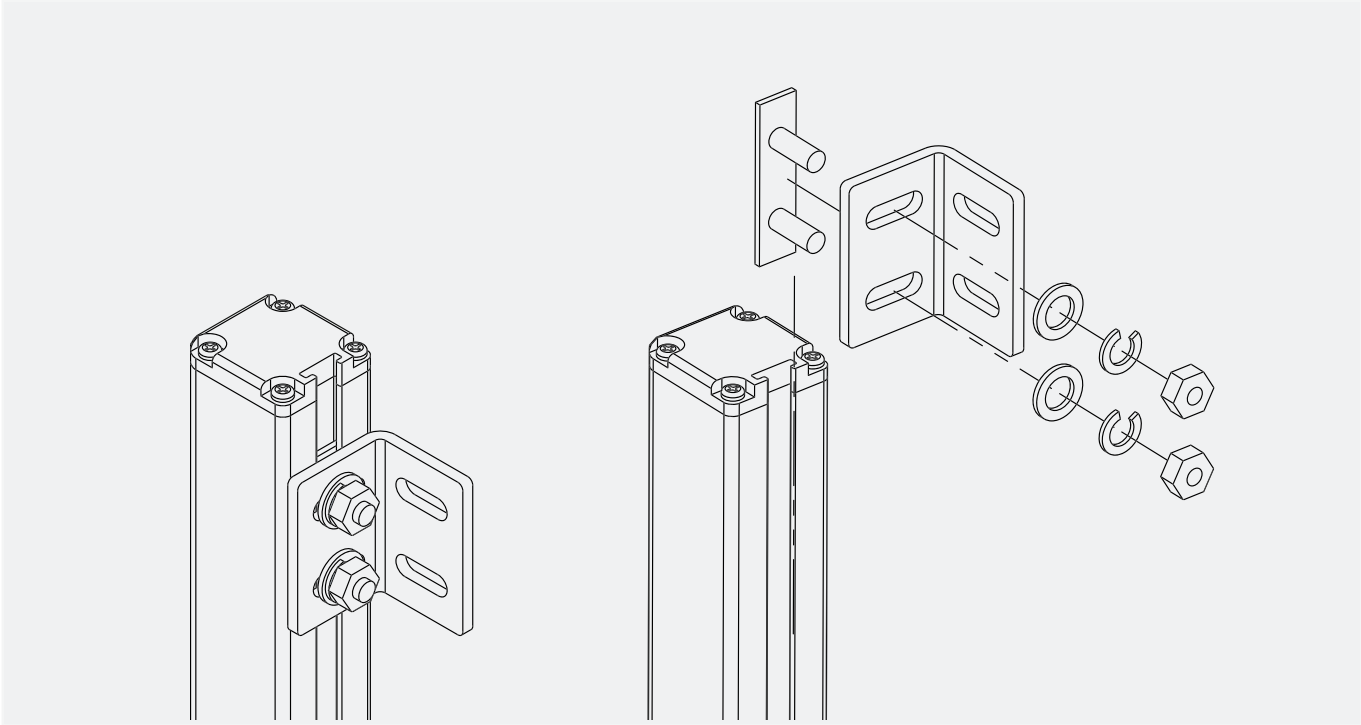

dimensions (mm)

IP69K

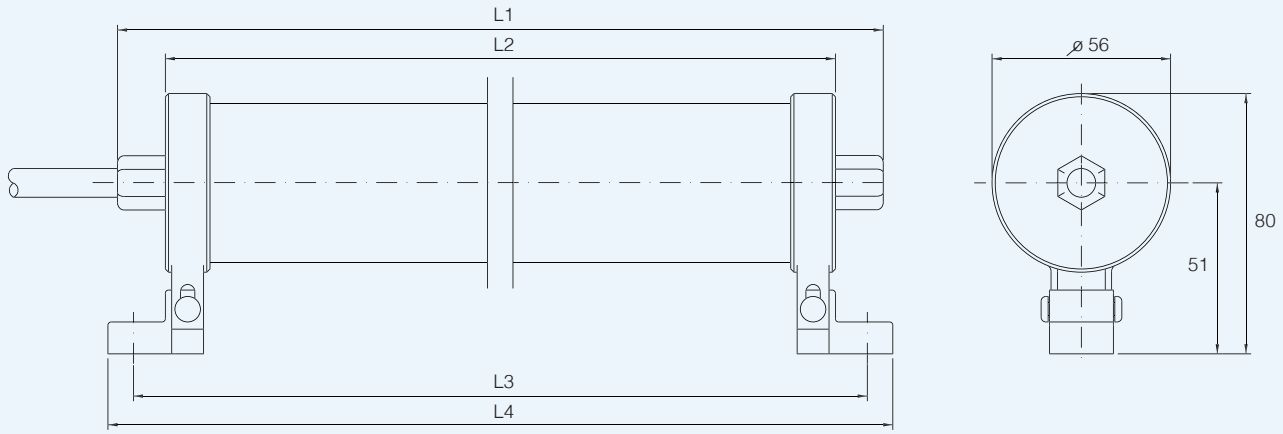

The light Curtain is supplied already fitted inside the transparent housing.
The power cord has a standard length of 10 meters and a maximum diameter of 6 mm. The brackets are included.

models	150	300	450	600	750	900	1,050	1,200	1,350	1,500	2B	3B	4B
L1 dimensions	320	470	620	770	920	1,070	1,220	1,370	1,520	1.670	760	1,060	1,160
L2 dimensions	290	440	620	740	890	1,040	1.190	1,340	1,490	1,640	730	1,030	1,130
L3 dimensions (± 3) (mm)	315	465	590	765	915	1,065	1.215	1.365	1,515	1,665	755	1,055	1,155
L4 dimensions (mm)	337	487	637	787	937	1,087	1.237	1.387	1,537	1,687	777	1,077	1,177

LP4ER series
Light Curtains
Type 4

features

- Type 4 according IEC 61496-1 and IEC 61496-2
- Robust housing (50x60 mm) for applications in presence of heavy shocks and vibrations
- 40 mm resolution for hand protection and 2,3,4 beams for body protection/access control
- Operating distance up to 16 m (standard version) and up to 60 m (LONG RANGE version)
- Integrated functions: MANUAL/AUTOMATIC Restart, EDM and operating distance selectable
- Standard M12 5 poles connector on TX unit and M12 8 poles or M23 9 poles on RX unit

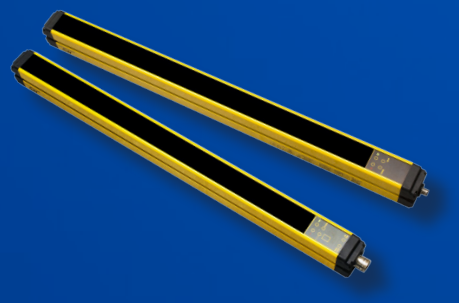

web contents

- Application notes
- Photos
- Catalogue / Manuals

code description

LP4 ER / 40 - 060 12

series	LP4	Type 4 safety light curtains 50 x 60 mm compact housing
couple	ER	Emitter + Receiver couple
beams	40	40 mm resolution; hand protection
	0A	2 beams resolution; body protection; 500 mm controlled height
	0B	3 beams resolution; body protection; 800 mm controlled height
	0C	4 beams resolution; body protection; 900 mm controlled height
height	050...120	Protected height from 500 to 1,200 mm
range		Standard model with selectable MANUAL/AUTOMATIC Restart and EDM functions
	L	Long range model
	12	Model with M12 connector on receiver unit

available models

2, 3, 4 beams resolution; 0...6 / 1...16 m controlled distance; 7 msec responce time

protected height (mm)	n° of beams	model
510	2	LP4ER/0A-050
810	3	LP4ER/0B-080
910	4	LP4ER/0C-090

available models

40 mm resolution; 8...30 / 18...60 m controlled distance

protected height (mm)	n° of beams	response time (msec)	model
610	20	17	LP4ER/40-050L
910	30	23	LP4ER/40-090L
1,210	40	28.5	LP4ER/40-120L

available models

2, 3, 4 beams resolution; 8...30 / 18...60 m controlled distance

protected height (mm)	n° of beams	response time (msec)	model
510	2	500	LP4ER/0A-050L
			LP4ER/0A-050L12
810	3	800	LP4ER/0B-080L
			LP4ER/0B-080L12
910	4	900	LP4ER/0C-090L
			LP4ER/0C-090L12

technical specifications

	LP4ER/**-***--	
operating voltage	19.2...28.8 Vdc	PELV power supplier according to EN 60204-1 Cap.6.4
power consumption, Receiver	6 W	no load
power consumption, Emitter	3 W	
output type	2 x PNP	OSSD safety outputs
output current	500 mA	higher values are considered overload
equivalent resistive load	48 Ω	lower values are considered short circuit
capacitive load	2 µF	lower values may be considered short circuit
recovery time	15 s	
response time OSSDs	30 ms	
OSSDs self test pulse duration	100 µs	
restart signal duration	100 ms	
Test signal duration	40 ms	
effective aperture angle (EAA)	≤ ± 2,5°	IEC 61496-1
artificial light rejection	according to IEC 61496-2	according to the reported standards
ambient light rejection	according to IEC 61496-2	
IP mechanical protection	IP65	
operating temperature	0...+55°C	
storage temperature	-25...+70°C	to be respected also during transportation
humidity	95%	no condensation
vibrations	according to IEC 61496-1	according to the reported standards
shocks	according to IEC 61496-1	
dimension	50 mm (front) x 60 mm	
S0 connectors Emitter	1 x M12 5p male	
S0 connectors Receiver	1x M23, 19p, male 1x M12, 8p, male (L12 male)	

safety parameters

LP4ER/40-***L	060	090	120
height	610	910	1210
number of beams	20	30	40
response time (ms)	17	23	28,5
type [1]	4		
SIL[2]	3		
SILCL [3]	3		
PL [4]	e		
PFHd	1,02E-08	1,17E-08	1,32E-08
DCavg	98,37%	98,49%	98,57%
MTTFd (years)	100		
CFF	80%		

LP4ER/**-***	0A-050	0B-080	0C-090
height	500	800	900
number of beams	2	3	4
response time (ms)	7	7	7
type [1]	4		
SIL[2]	3		
SILCL [3]	3		
PL [4]	e		
PFHd	7,53E-09	7,70E-09	7,87E-09
DCavg	97,94%	97,99%	98,03%
MTTFd (years)	100		
CFF	80%		

[1] ref. CEI EN 61496-1; CEI EN 61496-2
[2] ref. CEI EN 61508
[3] ref. CEI EN 62061 + CEI EN 62061/EC2
[4] ref. UNI EN ISO 13849-1

LP4ER/**-***L	0A-050	0B-080	0C-090
height	500	800	900
number of beams	2	3	4
response time (ms)	7	7	7
type [1]	4		
SIL[2]	3		
SILCL [3]	3		
PL [4]	e		
PFHd	7.53E-09	7.70E-09	7.87E-09
DCavg	97.94%	97.99%	98.03%
MTTFd (years)	100		
CFF	80%		

LP4ER/**-***L12	0A-050	0B-080	0C-090
height	500	800	900
number of beams	2	3	4
response time (ms)	7	7	7
type [1]	4		
SIL[2]	3		
SILCL [3]	3		
PL [4]	e		
PFHd	7.53E-09	7.70E-09	7.87E-09
DCavg	97.94%	97.99%	98.03%
MTTFd (years)	100		
CFF	80%		

electrical diagrams of the connections

LP4ER series

M12
(5 poles maleTX unit)

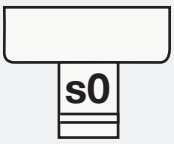

LP4ER/ **-***_

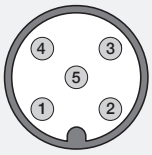

pin	color	signal	type	description
1	BN	$24V_{DC}$	POWER	power supply input
2	WH	range H/Test	IN	selection input
3	BU	0V	POWER	supply voltage reference
4	BK	range H/Test	IN	selection input
5	GY	PE	GND	protection earth

possible combinations

pin 2	pin 4	function
LO	LO	test (no emission)
LO	HI	emission with high range
HI	LO	emission with low range
HI	HI	not admitted

BK	black	OG	orange
BN	brown	GN	green
RD	red	BU	blue
YE	yellow	GY	grey
WH	white	VT	violet
PK	pink		

The Test contact is necessary only if the entire safety chain of the receiver downstream must be tested.
If the Test is not necessary replace the TEST contact with direct wiring at 24 V_{DC}.

electrical diagrams of the connections

LP4ER series

M23
(19 poles male RX unit)

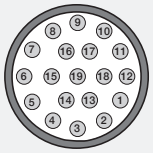

LP4ER/**-***
LP4ER/**-***L

pin	color	signal	type	description
1	WH	N.C.	-	not connected
2	RD	OSSD2	OUT	second safety static output (PNP)
3	GY	OSSD1	OUT	first safety static output (PNP)
4	YE	System Status + Sign. levlel	OUT	repetition of OSSDs status, see note + low signal level indication, see note
5	GN	N.C.	- a b	not connected
6	BU	$0V_{CC}$	POWER	supply voltage reference
7	VT	N.C.	-	not connected
8	GY - PK	N.C.	-	not connected
9	RD - BU	N.C.	-	not connected
10	WH - GN	N.C.	-	not connected
11	BK	Abilitaz. EDM	IN	enabling for external contactor control
12	WH - GN	PE	GND	earth protection connection
13	WH - YE	Man. / Autom.	IN	selection of the Start/Restart mode
14	BN - YE	start	IN	connection to the Start/Restart button
15	WH - GY	N.C.	-	not connected
16	BN - GY	N.C.	-	not connected
17	WH - PK	N.C.	-	not connected
18	BN - GN	EDM	IN	connection to the external control contacts
19	BN	$24V_{CC}$	POWER	supply voltage input

BK	black	**OG**	orange	**YE**	yellow	**GY**	grey
BN	brown	**GN**	green	**WH**	white	**VT**	violet
RD	red	**BU**	blue	**PK**	pink		

serie LP4ER

M12
(8 poles male RX unit L12 models)

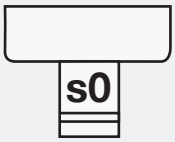

LP4ER/0*-***L12

pin	color	signal	type	description
1	WH	OSSD1	OUT	first safety static output (PNP)
2	BN	$24V_{CC}$	POWER	supply voltage
3	GN	OSSD2	OUT	second safety static output (PNP)
4	YE	EDM	IN	connection to the external control contacts (EDM) or connected at 0V to exclude EDM
5	GY	Mode_A	IN	selection of the manual or automatic Start/Restart mode
6	PK	Mode_B	IN	selection of the manual or automatic Start/Restart mode
7	BU	0V	POWER	supply voltage reference
8	RD	FE	GND	protection earth

NOTE: On these models it is possible to choose the operating modes by changing the wiring. By using the EDM function it is possible to extend the safety control to the contactors controlled downstream, that must be the type with guided contacts and approved for safety applications.

dimensions (mm)

LP4ER/40-***L, LP4ER/0*-*** - Receiver

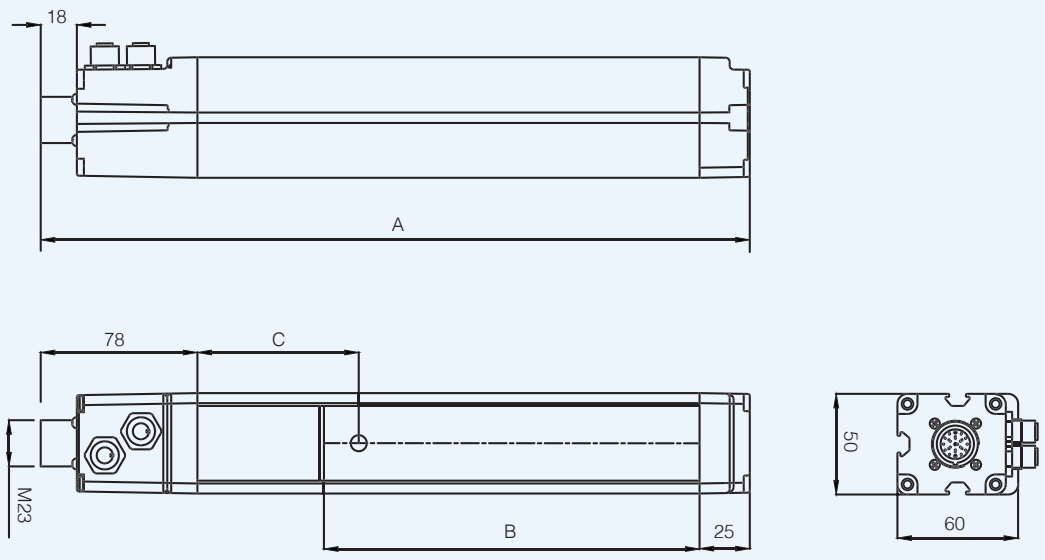

LP4ER/40-***L12, LP4ER/0*-***L, LP4ER/0*-***L12 - Emitter

dimensions	LP4ER/**-***			LP4ER/**-***L					
	0A-050	0B-080	0C-090	40-060	40-090	40-120	0A-050	0B-080	0C-090
A (TX)	736	1,036	1,136	736	1,036	1,336	736	1,036	1,136
B (protected height)	510*	810*	910*	610	910	1,210	510*	810*	910*
C (first beam quote)	120			76					

accessories

ST203 / outfit mounting accessories

product	to be used with	dimensions (mm)	description / installation
	LP4 series	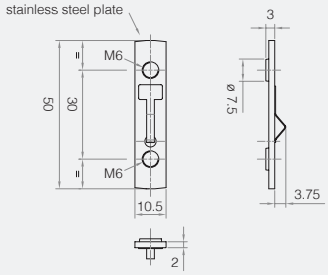	**Fastening insert for 50x60 profile. Part of the standard kit** Two pieces are provided for each bracket ST202.

ST202 / outfit mounting accessories

product	to be used with	dimensions (mm)	description / installation
	LP4 series	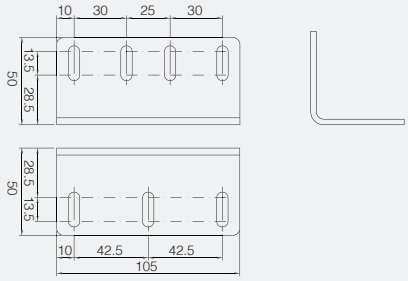	**L Bracket** Long bracket. Part of the standard kit. Two pieces are provided for each couples. Must be applied in the housin part of the body.

LP4PF series
Light Curtains
Type 4

features

- Type 4 according IEC 61496-1 and IEC 61496-2
- Robust housing (50x60 mm) for applications in presence of heavy shocks and vibrations
- Complete passive unit made by pre-mounted and pre-aligned integrated mirrors
- Protected height 500, 800 an 900 mm
- Resolutions 2, 3, 4 beams for body protection / access control
- Integrated functions: MANUAL/AUTOMATIC Restart and EDM
- Operating distance up to 6 m
- M12 8 polse standard connector

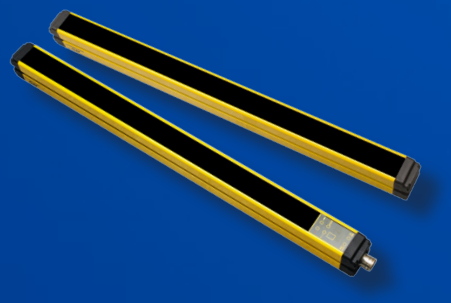

web contents

- Application notes
- Photos
- Catalogue / Manuals

code description

LP4 PF / 0A - 050

series	LP4	Type 4 safety light curtains 50 x 60 mm compact housing
couple	PF	M12 connecored active element + passive element couple
beams	0A	2 beams resolution; body protection; 500 mm protected height
	0B	3 beams resolution; body protection; 800 mm protected height
	0C	4 beams resolution; body protection; 900 mm protected height
protected height	050	500 mm protected height
	080	800 mm protected height
	090	900 mm protected height

available models

0...6 m controlled distance; ≤ 7 msec response time

protected height (mm)	n° of beams	dist. between beams (mm)	model
510	2	500	LP4PF/0A-050
810	3	800	LP4PF/08-080
910	4	900	LP4PF/0C-090

technical specifications

	LP4PF/**-***	
operating voltage	19.2...28.8 Vdc	PELV power supplier according to EN 60204-1 Cap.6.4
power consumption, Receiver	6 W	no load
power consumption, Emitter	3 W	
output type	2 x PNP	OSSD safety outputs
output current	500 mA	higher values are considered overload
equivalent resistive load	48 Ω	lower values are considered short circuit
capacitive load	2 µF	lower values may be considered short circuit
recovery time	15 s	
response time (OSSDs OFF)	30 ms	
effective aperture angle (EAA)	≤ ± 2.5°	IEC 61496-1
artificial light rejection	according to IEC 61496-2	according to the reported standards
ambient light rejection	according to IEC 61496-2	
IP mechanical protection	IP65	without any additional precaution the device can't be used for outdoor applications
operating temperature	0...+55°C	no condensation
storage temperature	-25...+70°C	to be respected also during transportation
humidity (no condensation)	95% (no condensation)	no condensation
vibrations	according to IEC 61496-1	according to the reported standards
shocks	according to IEC 61496-1	
cable length (power supply/outputs)	100 m	cable section 0.34 mm2 (to respect max length)
dimension	50 mm (front) x 60 mm	painted aluminium RAL 1012
connector S0 active unit	1 x M12 8p male	PVC sheath, ø 5.5 mm L 10 m, 0.34 mm2

safety parameters

LP4PF/**-***_	0A-050	0B-080	0C-090
dist. between beams	500	800	900
number of beams	2	3	4
response time (ms)	≤ 7		
type [1]	4		
SIL[2]	3		
SILCL [3]	3		
PL [4]	e		
PFHd	4.83E-09	4.92E-09	5.01E-09
DCavg	98.14%	98.16%	98.19%
MTTFd (years)	100		
CFF	80%		

[1] ref. CEI EN 61496-1; CEI EN 61496-2
[2] ref. CEI EN 61508
[3] ref. CEI EN 62061 + CEI EN 62061/EC2
[4] ref. UNI EN ISO 13849-1

electrical diagrams of the connections

LP4PF series

M12
(8 poles male active unit)

LP4PF / **-***

BK	black	**OG**	orange	**WH**	white
BN	brown	**GN**	green	**PK**	pink
RD	red	**BU**	blue	**VT**	violet
YE	yellow	**GY**	grey		

pin	color	signal	type	description
1	WH	OSSD1	OUT	first safety static output (PNP)
2	BN	$24V_{CC}$	POWER	supply voltage
3	GN	OSSD2	OUT	second safety static output (PNP)
4	YE	EDM	IN	connection to the external control contacts (EDM) or connected at 0V to exclude EDM
5	GY	Mode_A	IN	selection of the manual or automatic Start/Restart mode
6	PK	Mode_B	IN	selection of the manual or automatic Start/Restart mode
7	BU	0V	POWER	supply voltage reference
8	RD	FE	GND	protection earth

NOTE: On these models it is possible to choose the operating modes by changing the wiring. By using the EDM function it is possible to extend the safety control to the contactors controlled downstream, that must be the type with guided contacts and approved for safety applications

dimensions (mm)

LP4PF/0A-050

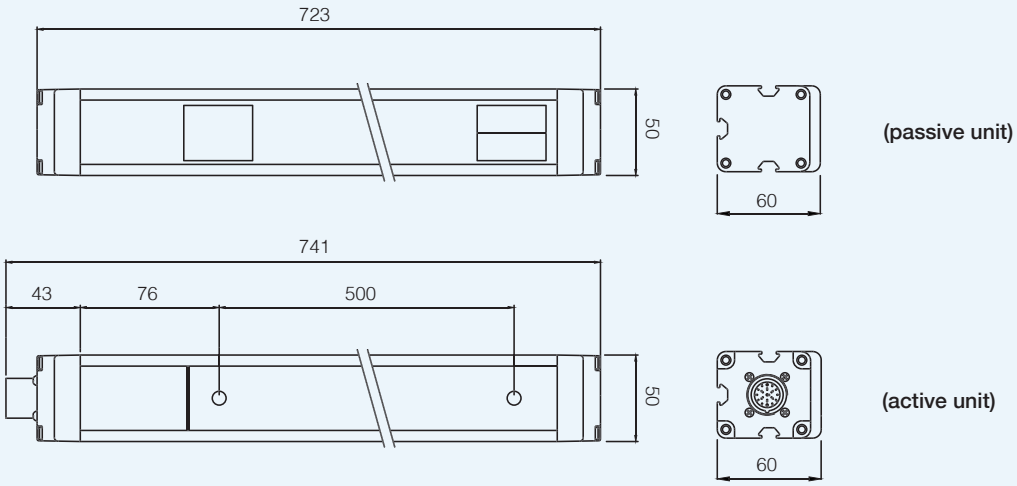

LP4PF/0B-080

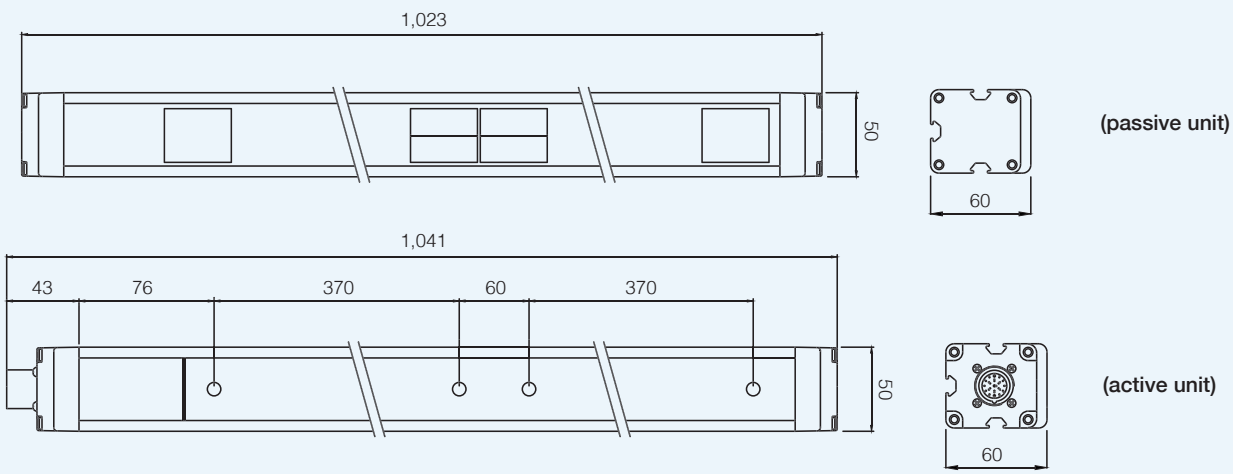

dimensions (mm)

LP4PF/0C-090

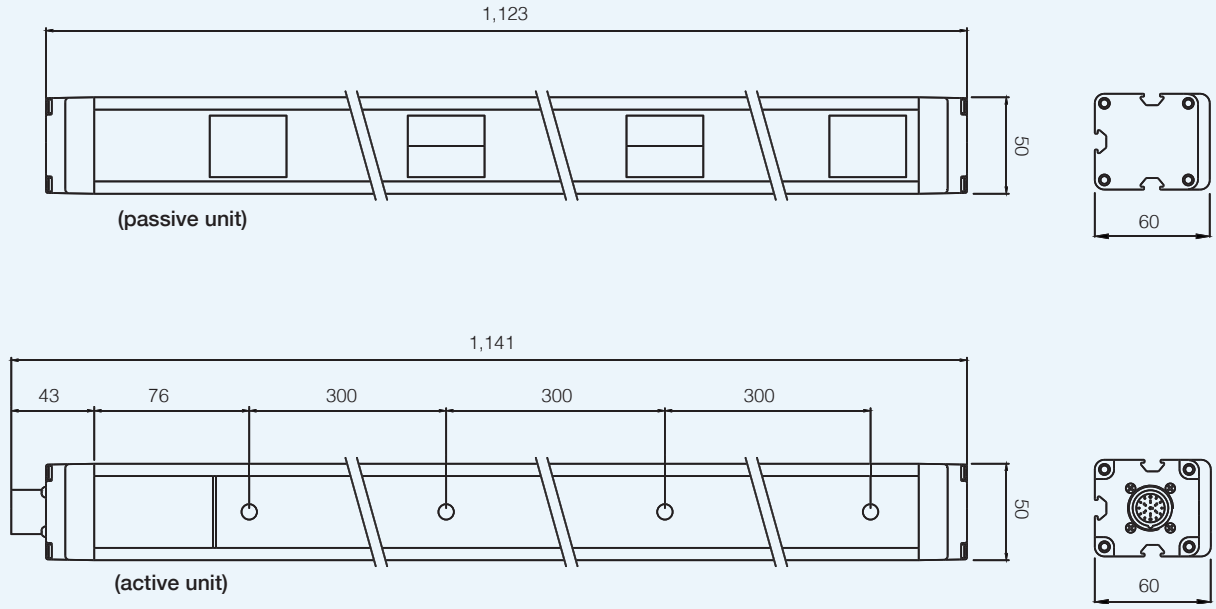

accessories

ST203 / outfit mounting accessories

product	to be used with	dimensions (mm)	description / installation
	LP4 series	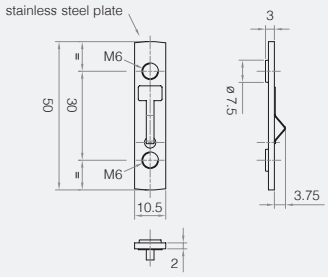	**Fastening insert for 50x60 profile. Part of the standard kit** Two pieces are provided for each bracket ST202.

ST202 / outfit mounting accessories

product	to be used with	dimensions (mm)	description / installation
	LP4 series	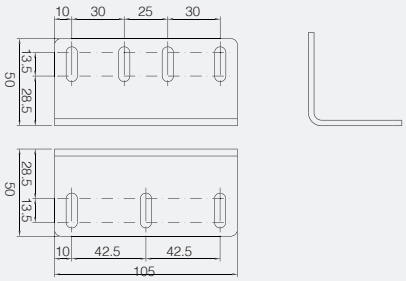	**L Bracket** Long bracket. Part of the standard kit. Two pieces are provided for each couples. Must be applied in the housin part of the body.

LP4ER_M series
Light curtains
Type 4

features

- Type 4 according IEC 61496-1 and IEC 61496-2
- Robust housing (50 x 60 mm) for applications in presence of heavy shocks and vibrations
- 30 and 40 mm hand protection, 90 mm presence control and 2, 3, 4 beams body protection/access control
- Protected height from 300 mm up to 1800 mm
- Integrated unctions: AUTOMATIC/MANUAL Restart, EDM, range reduction selectable
- Muting and Override function selectable through dedicate wires
- M12 5 poles and M23 19 poles standard connectors

web contents

- Application notes
- Photos
- Catalogue / Manuals

code description

LP4 R / 30 - 030 M4 L

series	LP4	Type 4 Safety light Curtains 50 x 60 mm compact housing
couple	ER	Emitter + Receiver couple
beam	30	30 mm resolution, hand protection
	40	40 mm resolution, hand protection
	90	90 mm resolution, presence control
	0A	2 beam resolution, body protection, 500 mm protected height
	0B	3 beam resolution, body protection, 800 mm protected height
	0C	4 beam resolution, body protection, 900 mm protected height
height	050...180	Protected height from 300 to 1,800 mm
muting	M4	Integrated Muting function for 4 Muting sensors
range	L	Long range

available models

30 mm resolution; 0...6 / 1...16 m controlled distance

protected height (mm)	n° of beams	response time (msec)	model
310	16	12	LP4ER/30-030M4
460	24	15	LP4ER/30-045M4
610	32	18	LP4ER/30-060M4
760	40	21	LP4ER/30-075M4
910	48	24	LP4ER/30-090M4
1,060	56	2	LP4ER/30-105M4
1,210	64	30	LP4ER/30-120M4

available models

40 mm resolution; 0...6 / 1...16 m controlled distance

protected height (mm)	n° of beams	response time (msec)	model
310	10	9,5	LP4ER/40-030M4
460	15	11	LP4ER/40-045M4
610	20	13	LP4ER/40-060M4
760	25	15	LP4ER/40-075M4
910	30	17	LP4ER/40-090M4
1,060	35	19	LP4ER/40-105M4
1,210	40	21	LP4ER/40-120M4
1,360	45	23	LP4ER/40-135M4
1,510	50	25	LP4ER/40-150M4
1,660	55	27	LP4ER/40-165M4
1,810	60	28.5	LP4ER/40-180M4

available models

40 mm resolution; 8...30 / 18...60 m controlled distance

protected height (mm)	n° of beams	response time (msec)	model
610	20	13	LP4ER/40-060M4L
910	30	23	LP4ER/40-090M4L
1,210	40	28.5	LP4ER/40-120M4L

available models

90 mm resolution; 0...6 / 1...16 m controlled distance

protected height (mm)	n° of beams	response time (msec)	model
310	5	7	LP4ER/90-030M4
460	7	8	LP4ER/90-045M4
610	9	9	LP4ER/90-060M4
760	11	10	LP4ER/90-075M4
910	13	10.5	LP4ER/90-090M4
1,060	15	11	LP4ER/90-105M4
1,210	17	12	LP4ER/90-120M4
1,360	19	13	LP4ER/90-135M4
1,510	21	13.5	LP4ER/90-150M4
1,660	23	14	LP4ER/90-165M4
1,810	25	15	LP4ER/90-180M4

available models

7 msec response time; 0...6 / 1...16 m controlled distance

protected height (mm)	n° of beams	response time (msec)	model
510	2	500	LP4ER/0A-050M4
810	3	800	LP4ER/0B-080M4
910	4	900	LP4ER/0C-090M4

available models

7 msec responce time; 8...30 / 18...60 m controlled distance

protected height (mm)	n° of beams	response time (msec)	model
510	2	500	LP4ER/0A-050M4L
810	3	800	LP4ER/0B-080M4L
910	4	900	LP4ER/0C-090M4L

technical specifications

	LP4ER / **-***M4-	
operating voltage	19.2...28.8 Vdc	PELV power supplier according to EN 60204-1 Cap.6.4
power consumption, Receiver	6 W	no load
power consumption, Emitter	3 W	
output type	2 x PNP	OSSD safety outputs
output current	500 mA	higher values are considered overload
equivalent resistive load	48 Ω	lower values are considered short circuit
capacitive load	2 µF	lower values may be considered short circuit
recovery time	15 s	
response time OSSDs	30 ms	
effective aperture angle (EAA)	≤ ± 2.5°	IEC 61496-1
artificial light rejection	according to IEC 61496-2	according to the reported standards
ambient light rejection	according to IEC 61496-2	
IP mechanical protection	IP65	without any additional precaution the device can't be used for outdoor applications
operating temperature	0...+55°C	no condensation
storage temperature	-25...+70°C	to be respected also during transportation
humidity	95%	no condensation
vibrations	according to IEC 61496-1	according to the reported standards
shocks	according to IEC 61496-1	
cable length (power supply/outputs)	100 m	painted aluminium RAL 1012
dimension	50 mm (front) x 60 mm	
S0 connectors Emitter	1 x M12, 5p male, nickel-plated brass	
S0 connectors Receiver	1x M23, 19p, male, nickel-plated brass	
S1 and S2 connectors (or S1) receiver	2/1 M12 5p female	

safety parameters

LP4ER/30-***M4	030	045	060	075	090	105	120
height (mm)	160	310	460	610	760	910	1,060
number of beams	16	24	32	40	48	56	64
response time (ms)	12	15	18	21	24	2	30
Type [1]	4						
SIL[2]	3						
SILCL [3]	3						
PL [4]	e						
PFHd	9.06E-09	9.89E-06	1.09E-08	1.18E-08	1.28E-08	1.37E-08	1.46E-08
DCavg	98.24%	98.35%	98.44%	98.50%	98.55%	98.56%	98.63%
MTTFd (years)	100						
CFF	80%						

[1] ref. CEI EN 61496-1; CEI EN 61496-2 [2] ref. CEI EN 61508
[3] ref. CEI EN 62061 + CEI EN 62061/EC2 [4] ref. UNI EN ISO 13849-1

LP4ER/40-***M4	030	045	060	075	090	105	120	135	150	165	180
height (mm)	310	460	610	760	910	1,060	1,210	1,360	1,510	1,660	1,810
number of beams	10	15	20	25	30	35	40	45	50	55	60
response time (ms)	9,5	11	13	15	17	19	21	23	25	27	28,5
Type [1]	4										
SIL[2]	3										
SILCL [3]	3										
PL [4]	e										
PFHd	8.71E-09	9.45E-09	1.02E-08	1.10E-08	1.17E-08	1.25E-08	1.32E-08	1.40E-08	1.47E-08	1.55E-08	1.62E-08
DCavg	98.19%	98.29%	98.37%	98.44%	98.49%	98.53%	98.57%	98.60%	98.63%	98.65%	98.67%
MTTFd (years)	100										
CFF	80%										

LP4ER/40-***M4L	060	090	120
height (mm)	610	910	1,210
number of beams	20	30	40
response time (ms)	13	23	28.5
Type [1]	4		
SIL[2]	3		
SILCL [3]	3		
PL [4]	e		
PFHd	1.02E-08	1.17E-08	1.32E-08
DCavg	98.37%	98.49%	98.57%
MTTFd (years)	100		
CFF	80%		

LP4ER/90-***M4	030	045	060	075	090	105	120	135	150	165	180
height (mm)	310	460	610	760	910	1,060	1,210	1,360	1,510	1,660	1,810
number of beams	5	7	9	11	13	15	17	19	21	23	25
response time (ms)	7	8	9	10	10.5	11	12	13	13.5	14	15
Type (1)	4										
SIL(2)	3										
SILCL (3)	3										
PL (4)	e										
PFHd	8.91E-09	9.48E-09	1.01E-08	1.06E-08	1.12E-08	1.18E-08	1.24E-08	1.29E-08	1.35E-08	1.41E-08	1.47E-08
DCavg	98.22%	98.30%	98.36%	98.41%	98.46%	98.50%	98.53%	98.56%	98.58%	98.61%	98.63%
MTTFd (years)	100										
CFF	80%										

LP4ER/**-***M4	0A-050	0B-080	0C-090
dist. between beams	500	800	900
number of beams	2	3	4
response time (ms)	7	7	7
Type (1)	4		
SIL(2)	3		
SILCL (3)	3		
PL (4)	e		
PFHd	7.53E-09	7.70E-09	7.87E-09
DCavg	97.94%	97.99%	98.03%
MTTFd (years)	100		
CFF	80%		

LP4ER/**-***M4L	0A-050	0B-080	0C-090
dist. between beams	500	800	900
number of beams	2	3	4
response time (ms)	7	7	7
Type (1)	4		
SIL(2)	3		
SILCL (3)	3		
PL (4)	e		
PFHd	7.53E-09	7.70E-09	7.87E-09
DCavg	97.94%	97.99%	98.03%
MTTFd (years)	100		
CFF	80%		

electrical diagrams of the connections

LP4ER_M series

M12
(5 poles male unit)

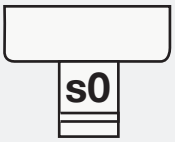

LP4ER/ **-***_

pin	color	signal	type	description
1	BN	$24V_{CC}$	POWER	power supply input
2	WH	range H/Test	IN	selection input
3	BU	0V	POWER	supply voltage reference
4	BK	range H/Test	IN	selection input
5	GY	PE	GND	protection earth

possible combinations

pin 2	pin 4	function
LO		test (no emission)
LO	HI	emission with high range
HI	LO	emission with low range
HI		not admitted
levels: LO = <5 V or open; HI = 11 to 30 V		

BK	black	OG	orange
BN	brown	GN	green
RD	red	BU	blue
YE	yellow	GY	grey
WH	white	VT	violet
PK	pink		

The Test contact is necessary only if the entire safety chain of the receiver downstream must be tested.
If the Test is not necessary replace the TEST contact with direct wiring at 24 V_{DC}.

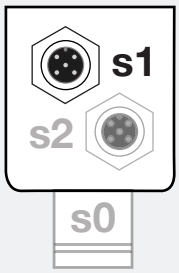

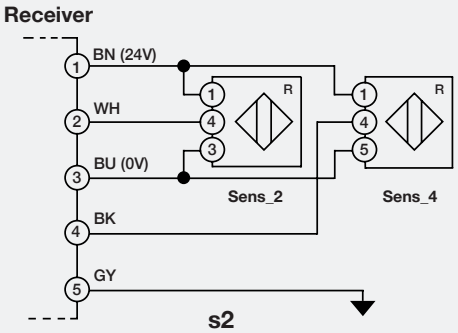

pin	color	signal	type	function	levels
1	BN	24 V_{DC}	POWER	supply voltage output	max. total output current: 100 mA
2	WH	sens_1	IN	muting 1 sensor input	LO: < 5 V or open; HI: 11 to 30 V
3	BU	0 V_{DC}	POWER	power supply reference	-
4	BK	sens_3	IN	muting 3 sensor input	input selection
5	GY	PE	GND	earth protection	LO: < 5 V or open; HI: 11 to 30 V
LO: < 5 V or open; HI: 11 to 30 V					

NOTE: The sensors can be of any type, the output level must be high when there is material (HI).

LP4ER series

M23
(19 poles male RX unit)

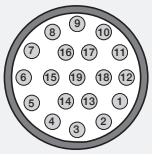

NOTE: The Muting Enabling signal (pin 15) must be LO before the HI enabling signal of the single sensors, and it must remain low for the entire duration of the sensor enabling signal, otherwise Muting will stop. The System Status output signal (pin 4) repeats the state of the OSSD outputs, HI= safety light curtain ON, LO= safety light curtain OFF; on models in which the signal level indication is present, the output status is momentarily denied with a pulse lasting 15 to 45ms and period 800ms if the signal is weak.

BK	black	**OG**	orange
BN	brown	**GN**	green
RD	red	**BU**	blue
YE	yellow	**GY**	grey
WH	white	**VT**	violet
PK	pink		

pin	color	signal	type	description
1	WH	Lamp. Muting	-	output for piloting the external Muting Lamp
2	RD	OSSD2	OUT	second safety static output (PNP)
3	GY	OSSD1	OUT	first safety static output (PNP)
4	YE	System Status + Sign. levlel	OUT	repetition of OSSDs status, see note + low signal level indication, see note
5	GN	N.C.	- a b	active with Muting, HI:Muting ON; LO:Muting OFF
6	BU	$0V_{CC}$	POWER	supply voltage reference
7	VT	Mode_0	-	input config. for the other models with Muting
8	GY - PK	Mode_1	-	input config. for the other models with Muting
9	RD - BU	Mode_2	-	input config. for the other models with Muting
10	WH - GN	Mode_3	-	input config. for the other models with Muting
11	BK	Abilitaz. EDM	IN	enabling for external contactor control
12	WH - GN	PE	GND	earth protection connection
13	WH - YE	Man. / Autom.	IN	selection of the Start/Restart mode
14	BN - YE	start	IN	connection to the Start/Restart button
15	WH - GY	N.C.	-	not connected
16	BN - GY	override_1	-	input 1 for the forced control of Muting
17	WH - PK	override_2	-	input 2 for the forced control of Muting
18	BN - GN	EDM	IN	connection to the external control contacts
19	BN	$24V_{CC}$	POWER	supply voltage input

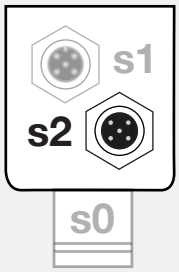

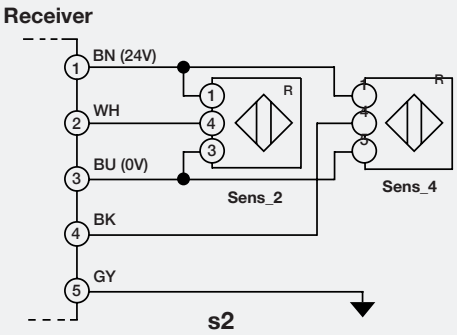

pin	color	signal	type	function	levels
1	BN	24 V_{DC}	POWER	supply voltage output	max. total output current: 100 mA
2	WH	sens_2	IN	muting 2 sensor input	LO: < 5 V or open; HI: 11 to 30 V
3	BU	0 V_{DC}	POWER	power supply reference	-
4	BK	sens_4	IN	muting 4 sensor input	input selection
5	GY	PE	GND	earth protection	LO: < 5 V or open; HI: 11 to 30 V
				LO: < 5 V or open; HI: 11 to 30 V	

NOTE: The sensors can be of any type, the output level must be high when there is material (HI).

dimensions (mm)

LP4ER/**-***M4 - Receiver

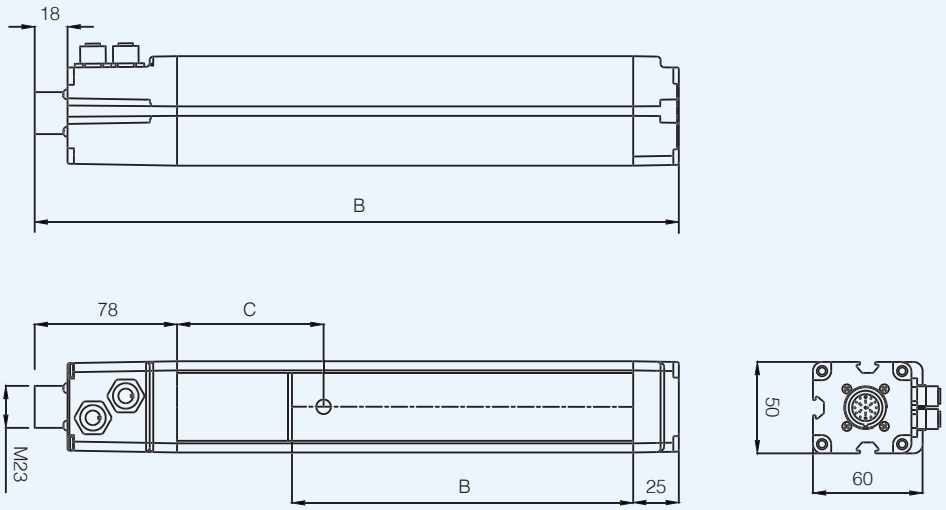

LP4ER/**-***M4 - Emitter

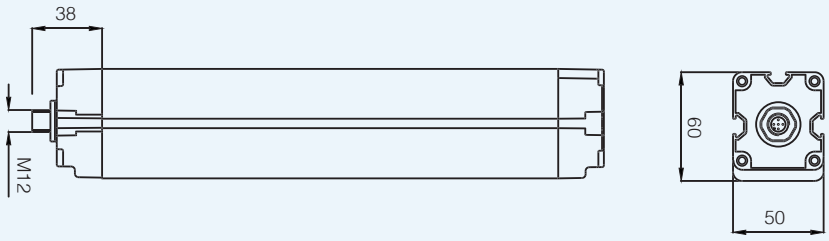

dimensions	LP4ER/**-***M4														LP4ER/**-***M4L		
	030	045	060	075	090	105	120	135	150	165	180	0A	0B	0C	0A	0B	0C
A (TX)	436	586	736	886	1,036	1,186	1,336	1,486	1,636	1,786	1,936	736	1,036	1,136	736	1,036	1,136
A (RX)	476	626	776	926	1,076	1,226	1,376	1,526	1,676	1,826	1,976	776	1,076	1,176	776	1,076	1,176
B (protected height)	310	460	610	760	910	1,060	1,210	1,360	1,510	1,660	1,810	510*	810*	910*	510*	810*	910*
C (first beam quote)	72											120			76		

accessories

ST203 / outfit mounting accessories

product	to be used with	dimensions (mm)	description / installation
	LP4 series	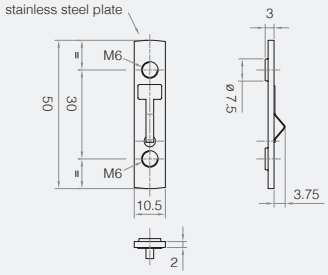	**Fastening insert for 50x60 profile. Part of the standard kit** Two pieces are provided for each bracket ST202.

ST202 / outfit mounting accessories

product	to be used with	dimensions (mm)	description / installation
	LP4 series	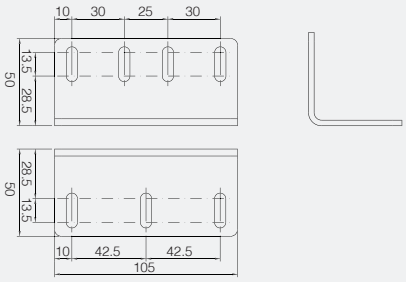	**L Bracket** Long bracket. Part of the standard kit. Two pieces are provided for each couples. Must be applied in the housin part of the body.

notes

LP4PT series
Light Curtains
Type 4

features

- Type 4 according IEC 61496-1 and IEC 61496-2
- Robust housing (50x60 mm) for applications in presence of heavy shocks and vibrations
- Complete passive unit made by pre-mounted and pre-aligned integrated mirrors
- Protected height 500, 800 an 900 mm
- Resolutions 2, 3, 4 beams for body protection / access control
- Integrated functions: MANUAL/AUTOMATIC Restart and EDM
- Operating distance up to 6 m
- Muting and Override function selectable through dedicate wires
- M12 5 poles and M23 19 poles standard connectors

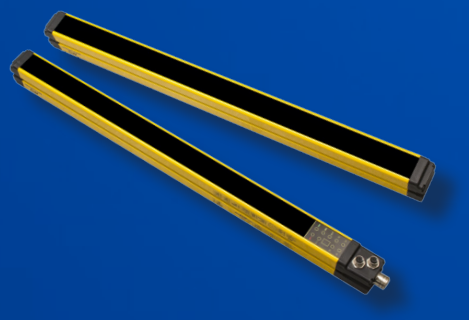

download area

- Application notes
- Photos
- Catalogue / Manuals

code description

LP4 PT / 0A - 050 M2

series	LP4	Type 4 safety light curtains 50 x 60 mm compact housing
couple	PT	M12 connecored active element + passive element couple
beams	0A	2 beams resolution; body protection; 500 mm protected height
	0B	3 beams resolution; body protection; 800 mm protected height
	0C	4 beams resolution; body protection; 900 mm protected height
height	050	500 mm protected height
	080	800 mm protected height
	090	900 mm protected height
muting	M2	Integrated Muting function for 2 Muting sensors
	M4	Integrated Muting function for 4 Muting sensors

available models

0...6 m controlled distance; 10 ms response time

protected height (mm)	n° of beams	response time (mm)	model
510	2	500	LP4PT/0A-050M2
			LP4PT/0A-050M4
810	3	800	LP4PT/0B-080M2
			LP4PT/0B-080M4
910	4	900	LP4PT/0C-090M2
			LP4PT/0C-090M4

technical specifications

	LP4PT	
operating voltage	19.2...28.8 Vdc	PELV power supplier according to EN 60204-1 Cap.6.4
power consumption, Receiver	6 W	no load
power consumption, Emitter	3 W	
output type	2 x PNP	OSSD safety outputs
output current	500 mA	higher values are considered overload
equivalent resistive load	48 Ω	lower values are considered short circuit
capacitive load	2 μF	lower values may be considered short circuit
recovery time	15 s	
response time OSSDs	30 ms	
effective aperture angle (EAA)	≤ ± 2.5°	IEC 61496-1
artificial light rejection	according to IEC 61496-2	according to the reported standards
ambient light rejection	according to IEC 61496-2	
IP mechanical protection	IP65	without any additional precaution the device can't be used for outdoor applications
operating temperature	0...+55°C	no condensation
storage temperature	-25...+70°C	to be respected also during transportation
humidity	95%	no condensation
vibrations	according to IEC 61496-1	according to the reported standards
shocks	according to IEC 61496-1	
use of deflection mirrors	0.85	
ambient factors	0.50 / 0.25	
cable length (power supply/outputs)	100 m	painted aluminium RAL 1012
section body	50 mm (front) x 60 mm	
S0 connector	1x M23, 19p, male, nickel-plated brass	
S1 or S2 connector (or S1 only)	2/1 M12 5p female	

safety parameters

LP4PT/**-***M2 (M4)	0A-050	0B-080	0C-090
dist. between beams	500	800	900
number of beams	2	3	4
response time (ms)	10		
Type [1]	4		
SIL[2]	3		
SILCL [3]	3		
PL [4]	e		
PFHd	4.83E-09	4.92E-09	5.01E-09
DCavg	98.14%	98.16%	98.19%
MTTFd (years)	100		
CFF	80%		

[1] ref. CEI EN 61496-1; CEI EN 61496-2
[2] ref. CEI EN 61508
[3] ref. CEI EN 62061 + CEI EN 62061/EC2
[4] ref. UNI EN ISO 13849-1

electrical diagrams of the connections

LP4ER series

M23
(19 poles male RX unit)

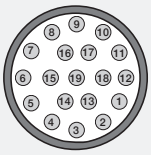

pin	color	signal	type	description
1	WH	Lamp. Muting	-	output for piloting the external Muting Lamp
2	RD	OSSD2	OUT	second safety static output (PNP)
3	GY	OSSD1	OUT	first safety static output (PNP)
4	YE	System Status + Sign. levlel	OUT	repetition of OSSDs status, see note + low signal level indication, see note
5	GN	N.C.	OUT	active with Muting, HI: Muting ON; LO: Muting OFF
6	BU	0 V_{DC}	POWER	supply voltage reference
7	VT	Mode_0	-	input config. for the other models with Muting
8	GY - PK	Mode_1	-	input config. for the other models with Muting
9	RD - BU	Mode_2	-	input config. for the other models with Muting
10	WH - GN	Mode_3	-	input config. for the other models with Muting
11	BK	Abilitaz. EDM	IN	enabling for external contactor control
12	WH - GN	PE	GND	earth protection connection
13	WH - YE	Man. / Autom.	IN	selection of the Start / Restart mode
14	BN - YE	start	IN	connection to the Start / Restart button
15	WH - GY	N.C.	-	not connected
16	BN - GY	override_1	-	input 1 for the forced control of Muting
17	WH - PK	override_2	-	input 2 for the forced control of Muting
18	BN - GN	EDM	IN	connection to the external control contacts
19	BN	24 V_{DC}	POWER	supply voltage input

NOTE: The Muting Enabling signal (pin 15) must be LO before the HI enabling signal of the single sensors, and it must remain low for the entire duration of the sensor enabling signal, otherwise Muting will stop. The System Status output signal (pin 4) repeats the state of the OSSD outputs, HI= safety light curtain ON, LO= safety light curtain OFF; on models in which the signal level indication is present, the output status is momentarily denied with a pulse lasting 15 to 45ms and period 800ms if the signal is weak

BK	black	**OG**	orange
BN	brown	**GN**	green
RD	red	**BU**	blue
YE	yellow	**GY**	grey
WH	white	**VT**	violet
PK	pink		

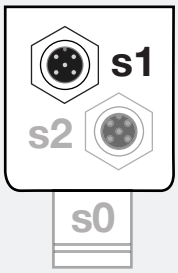

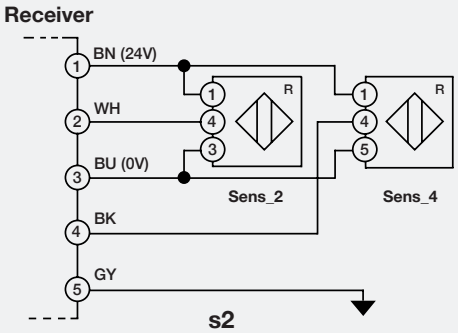

pin	color	signal	type	function	levels
1	BN	24 V_{DC}	POWER	supply voltage output	max. total output current: 100 mA
2	WH	sens_1	IN	muting 1 sensor input	LO: < 5 V or open; HI: 11 to 30 V
3	BU	0 V_{DC}	POWER	power supply reference	-
4	BK	sens_3	IN	muting 3 sensor input	input selection
5	GY	PE	GND	earth protection	LO: < 5 V or open; HI: 11 to 30 V
				LO: < 5 V or open; HI: 11 to 30 V	

NOTE: The sensors can be of any type, the output level must be high when there is material (HI).

electrical diagrams of the connections

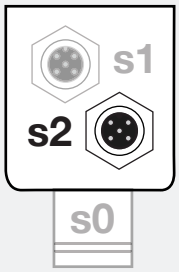

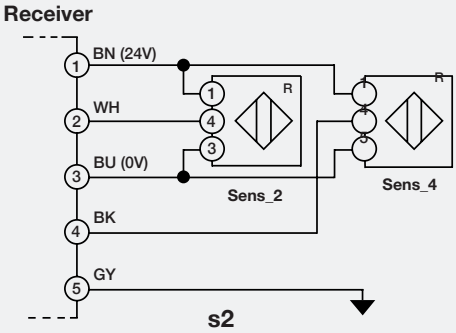

pin	color	signal	type	function	levels
1	BN	24 V_{DC}	POWER	supply voltage output	max. total output current: 100 mA
2	WH	sens_2	IN	muting 2 sensor input	LO: < 5 V or open; HI: 11...30 V
3	BU	0 V_{DC}	POWER	power supply reference	-
4	BK	sens_4	IN	muting 4 sensor input	input selection
5	GY	PE	GND	earth protection	LO: < 5 V or open; HI: 11...30 V
				LO: < 5 V or open; HI: 11...30 V	

NOTE: the sensors can be of any type, the output level must be high when there is material (HI).

dimensions (mm)

LP4PT/0A-050M2(4)

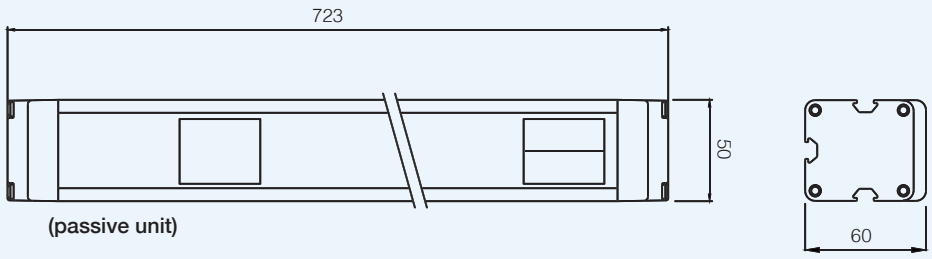

(passive unit)

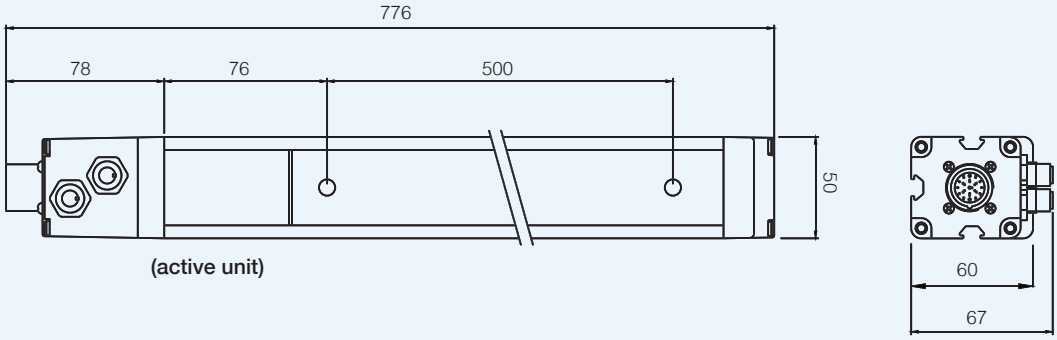

(active unit)

LP4PT/0B-080M2(4)

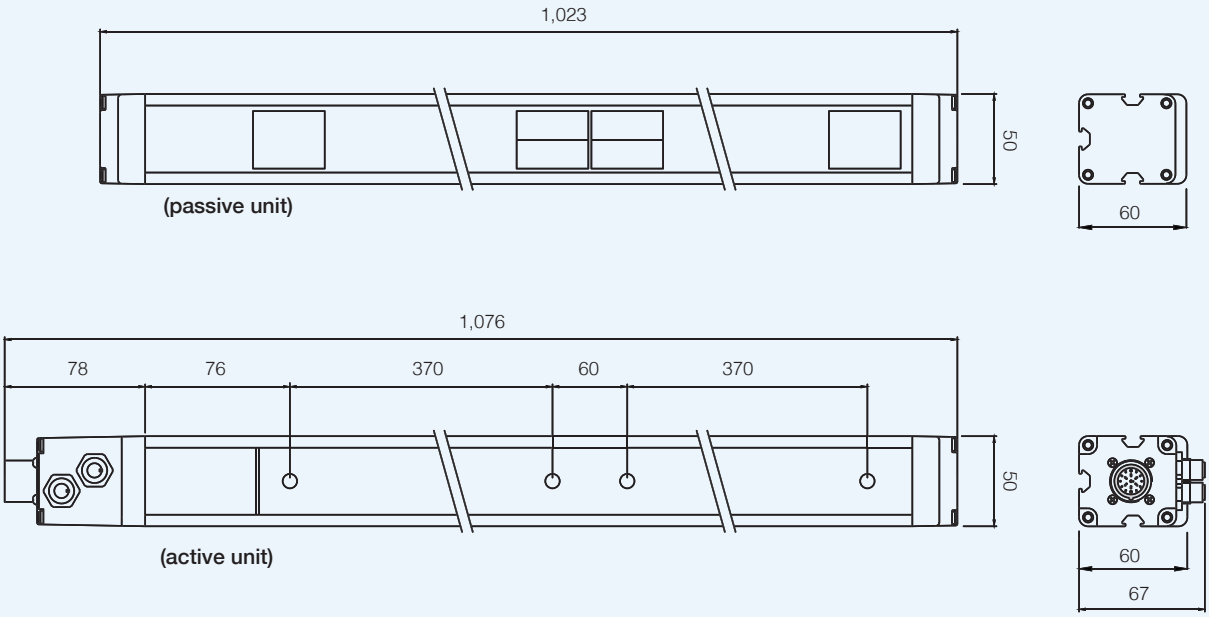

LP4PT/0C-090M2(4)

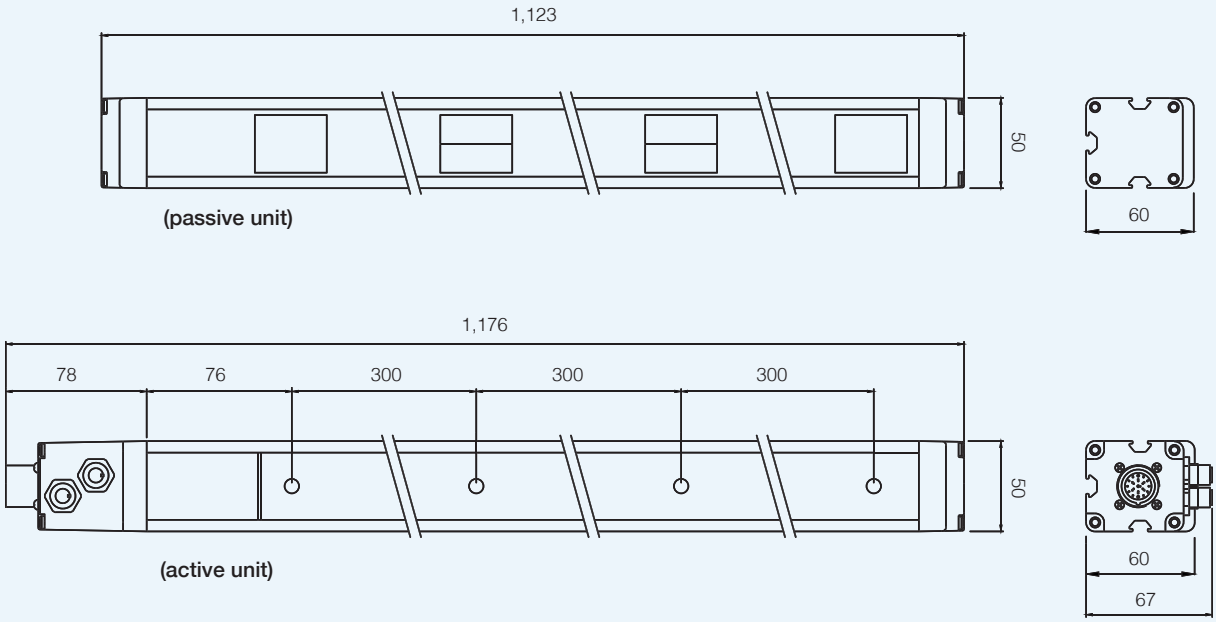

accessories

ST203 / outfit mounting accessories

product	to be used with	dimensions (mm)	description / installation
	LP4 series	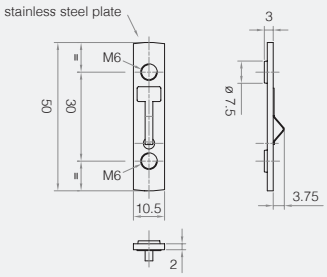	**Fastening insert for 50 x 60 profile. Part of the standard kit** Two pieces are provided for each bracket ST202.

ST202 / outfit mounting accessories

product	to be used with	dimensions (mm)	description / installation
	LP4 series	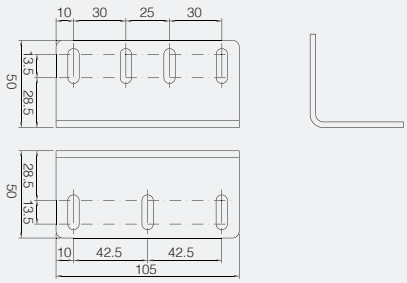	**L Bracket** Long bracket. Part of the standard kit. Two pieces are provided for each couples. Must be applied in the housin part of the body.

connectors

CD12M/0E-***A1 / M12 8 poles axial female connector with PVC cable

product	to be used with	dimensions (mm)	description / installation
	Safety light Curtains • LS2 STANDARD (TX) • LS4 STANDARD (TX) • LP4ER/0*-***L12 (RX) • LP4PF Safety Sensors • SH e TH • SH-IC e TH-IC	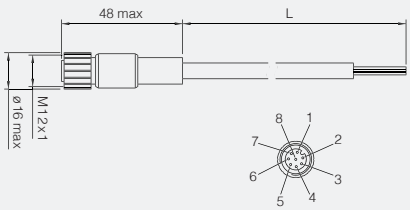	M12 8 poles axial female connector with PVC cable. Cable length is represented by *** digits: 050 : 5 m 100 : 10 m 150 : 15 m 250 : 25 m 400 : 40 m

CD12M/0E-***C1 / M12 8 poles 90° female connector with PVC cable

product	to be used with	dimensions (mm)	description / installation
	Safety light Curtains • LS2 STANDARD (RX) • LS4 STANDARD (RX) • LP4ER/0*-***L12 (RX) • LP4PF	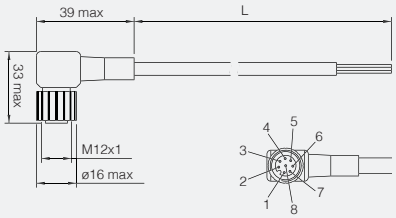	M12 8 poles 90° female connector with PVC cable. Cable length is represented by *** digits: 050 : 5 m 100 : 10 m 150 : 15 m

CD12M/0H-***A3 / M12 5 poles axial female connector with PVC cable

product	to be used with	dimensions (mm)	description / installation
	Safety light Curtains • LS2 BASE (TX e RX) • LS2 STANDARD (TX) • LS4 BASE (TX e RX) • LS4 STANDARD (TX) Safety Sensors • SH e TH • SH-IC e TH-IC	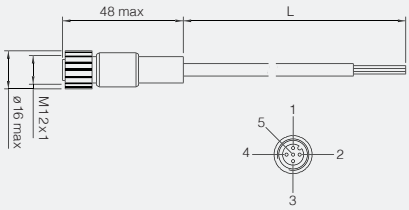	M12 5 poles axial female connector with PVC cable. Cable length is represented by *** digits: 050 : 5 m 100 : 10 m 150 : 15 m 250 : 25 m 500 : 50 m

CD12M/0H-***C3 / M12 5 poles 90° female connector with PVC cable

product	to be used with	dimensions (mm)	description / installation
	Safety light Curtains • LS2 BASE (TX e RX) • LS2 STANDARD (TX) • LS4 BASE (TX e RX) • LS4 STANDARD (TX) Safety Sensors • SH e TH • SH-IC e TH-IC	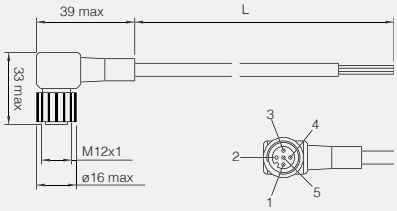	M12 5 poles 90° female connector with PVC cable. Cable length is represented by *** digits: 050 : 5 m 100 : 10 m 150 : 15 m

CD12M/0H-050D1 / M12 5 poles axial female connector

product	to be used with	dimensions (mm)	description / installation
	Safety light Curtains • LP4ER_M • LP4PT To be used for Muting	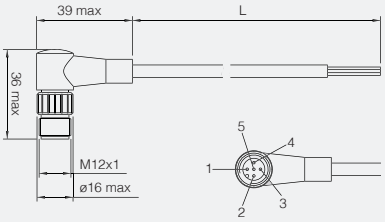	M12 5 poles axial female connector

CDP12/0H-***AC / M12 5 poles axial female female plug

product	to be used with	dimensions (mm)	description / installation
	Safety light Curtains • LS2_M, LS2_S, LS2_F (MASTER-SLAVE) • LS4_M, LS4_S, LS2_F (MASTER-SLAVE) • LP4ER, LP4ER_M: connection TX alla LP/ BOX-1	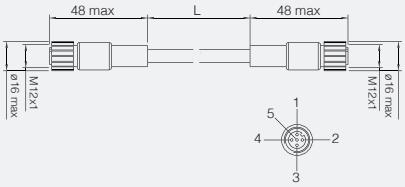	M12 5 poles axial female female plug. Cable length is represented by *** digits: 003 : 0.3 m 030 : 3 m 050 : 5 m

CD23M/0R-***A1 / M23 19 poles axial connector with PVC cable

product	to be used with	dimensions (mm)	description / installation
	Safety light Curtains • LP4ER/40_L • LP4ER_M (RX) • LP4PT (Unità attiva)	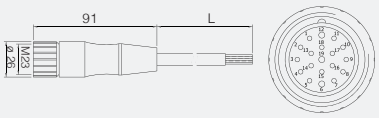	M23 19 poles axial connector with PVC cable. Cable length is represented by *** digits: 030 : 3 m 050 : 5 m 100 : 10 m 150 : 15 m 200 : 20 m 300 : 30 m

CD23M/0R-***A1LM / M23 19 poles axial connector with PVC cable and external Muting Lamp wire

product	to be used with	dimensions (mm)	description / installation
	Safety light Curtains • LP4ER_M; • LP4_PT;	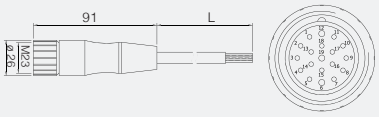	M23 19 poles axial connector with PVC cable and external Muting Lamp wire. Cable length is represented by *** digits: 200 : 20 m 300 : 30 m

CDP23/0R-***AC / M23 19 poles axial female female plug			
product	to be used with	dimensions (mm)	description / installation
	Safety light Curtains • LP4ER/40_L • LP4ER_M (RX) • LP4PT (active unit) To connect RX or Active Unit to LP/BOX-1	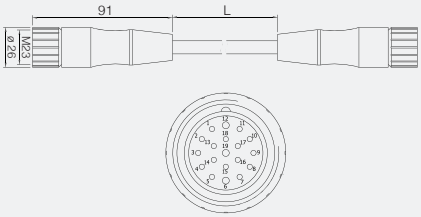	M12 5 poles axial female female plug. Cable length is represented by *** digits: 030 : 3 m 050 : 5 m 100 : 10 m

mounting brackets and anti-vibrating bumpers

ST VP 4 / 4 pieces anti-vibrating bumpers kit			
product	to be used with	dimensions (mm)	description / installation
	Safety light Curtains • LP4	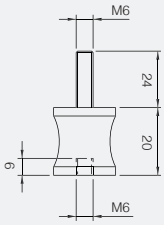	4 pieces anti-vibrating bumpers kit for LP4 Safety light Curtains

ST VP 6 / 6 pieces anti-vibrating bumpers kit			
product	to be used with	dimensions (mm)	description / installation
	Safety light Curtains • LP4	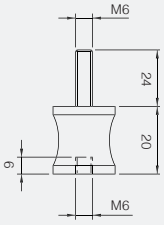	6 pieces anti-vibrating bumpers kit for LP4 Safety light Curtains

ST 4V S / 4 pieces anti-vibrating bumpers kit			
product	to be used with	dimensions (mm)	description / installation
	Safety light Curtains • LS2 • LS4	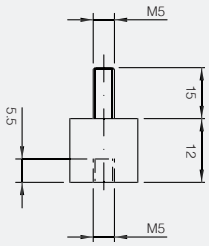	4 pieces anti-vibrating bumpers kit for LS4 Safety light Curtains 150 mm protected height models

ST 8V S / 8 pieces anti-vibrating bumpers kit

product	to be used with	dimensions (mm)	description / installation
	Safety light Curtains • LS2 • LS4	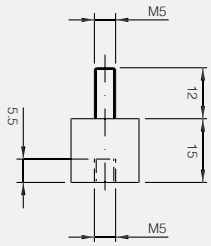	8 pieces anti-vibrating bumpers kit for LS4 Safety light Curtains 150...1,050 mm protected height models

ST 12V S / 12 pieces anti-vibrating bumpers kit for LS4 Safety light Curtains

product	to be used with	dimensions (mm)	description / installation
	Safety light Curtains • LS2 • LS4	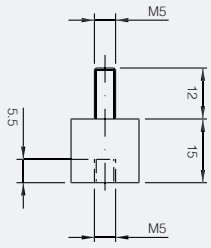	12 pieces anti-vibrating bumpers kit for LS4 Safety light Curtains 1,200...1,800 mm protected height models

ST 201 4 / 4 pieces L short mounting brackets kit

product	to be used with	dimensions (mm)	description / installation
	Safety light Curtains • LP4	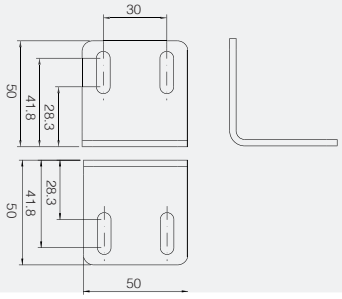	4 pieces L short mounting brackets kit for LP4 Safety light Curtains

ST 201 6 / 6 pieces L short mounting brackets kit

product	to be used with	dimensions (mm)	description / installation
	Safety light Curtains • LP4	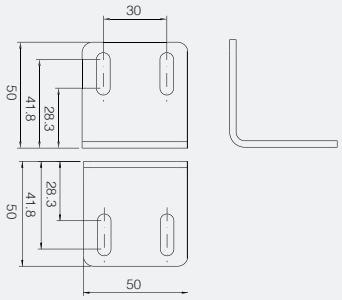	6 pieces L short mounting brackets kit for LP4 Safety light Curtains

ST 202 4 / 4 pieces L curved mounting brackets for passive element

product	to be used with	dimensions (mm)	description / installation
		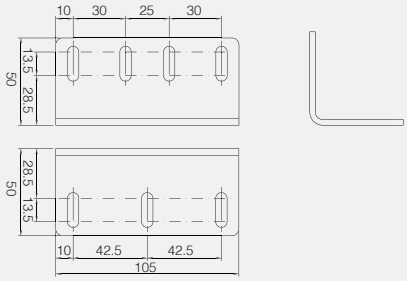	4 pieces L curved mounting brackets for passive element of LP4PF and LP4PT series

ST 203 4 / 4 pieces mounting nuts kit for LP4 Safety light Curtains

product	to be used with	dimensions (mm)	description / installation
	Safety light Curtains • LP4	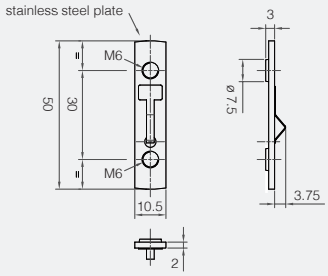	4 pieces mounting nuts kit for LP4 Safety light Curtains

ST 203 6 / 6 pieces mounting nuts kit for LP4 safety light curtains

product	to be used with	dimensions (mm)	description / installation
	Safety light Curtains • LP4	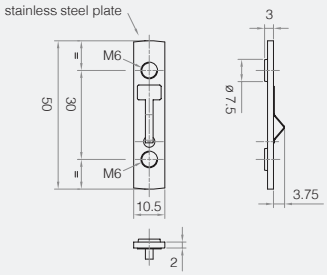	6 pieces mounting nuts kit for LP4 Safety light Curtains

ST 204 4S / 4 pieces mounting brackets kit

product	to be used with	dimensions (mm)	description / installation
	Safety light Curtains • LS2 • LS4	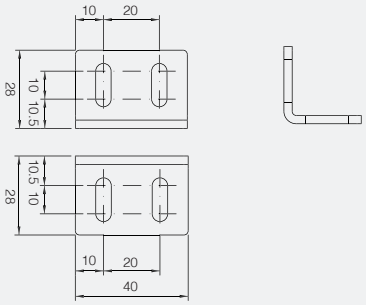	4 pieces mounting brackets kit for LS2/ LS4 Safety light Curtains

ST 204 6S / 6 pieces mounting brackets kit

product	to be used with	dimensions (mm)	description / installation
	Safety light Curtains • LS2 • LS4	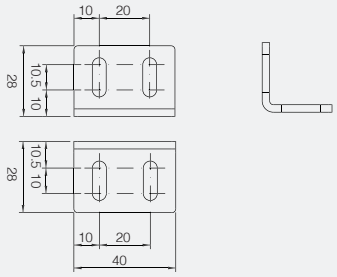	6 pieces mounting brackets kit for LS2/ LS4 Safety light Curtains

ST 206 4S / 4 pieces L curved mounting brackets kit

product	to be used with	dimensions (mm)	description / installation
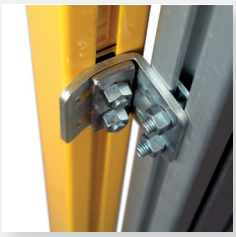	Safety light Curtains • LS2 • LS4	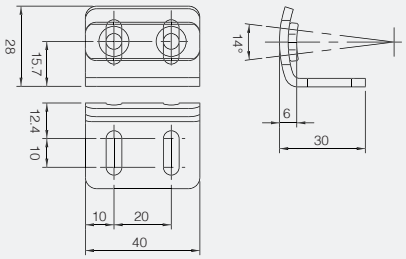	4 pieces L curved mounting brackets aad nuts kit for LS2/LS4 Safety light Curtains to ease mechanical installation

ST 206 6S / 6 pieces L curved mounting brackets kit

product	to be used with	dimensions (mm)	description / installation
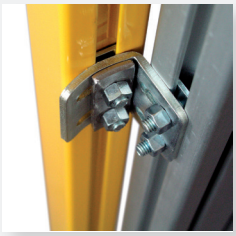	Safety light Curtains • LS2 • LS4	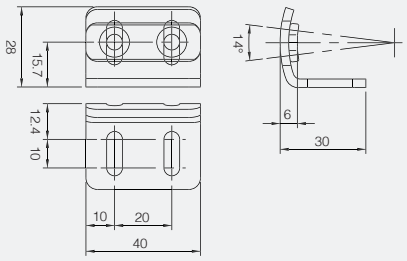	6 pieces L curved mounting brackets ad nuts kit for LS2/LS4 Safety light Curtains to ease mechanical installation

ST 207 S / 4 pieces rotating brackets kit

product	to be used with	dimensions (mm)	description / installation
	Safety light Curtains • LS2 • LS4	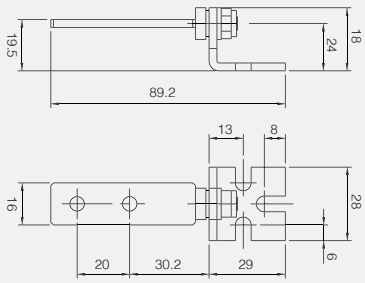	4 pieces rotating brackets and nuts kit for LS2/LS4 Safety light Curtains

test rod

ST 2214 / 2220 / 2230 / 2240 / 2250			
product	to be used with	dimensions (mm)	description / installation
	Safety light curtains • LS4ER/14 • LS4ER/20 • LS2ER/30 • LS4ER/30 • LS2ER/40 • LS4ER/40 • LP4ER/40		14 - 20 - 30 - 40 - 50 mm resolution test rod

model	BLACK painted aluminum pipe	
	Dim. “A” (mm)	Dim. “A” (mm)
ST 2214	ø 14	1
ST 2220	ø 20	1
ST 2230	ø 30	1
ST 2240	ø 40	1
ST 2250	ø 50	1,5

protective columns for safety light curtains

ST F FIX / standard column base			
product	to be used with	dimensions (mm)	description / installation
	Columns for Safety series • ST CL*** • ST CLS***	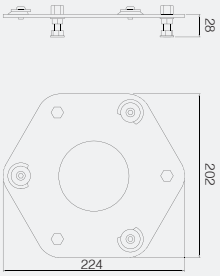	Standard column base

ST FLEX / column base with load springs			
product	to be used with	dimensions (mm)	description / installation
	Safety light Curtains • ST CL*** • ST CLS***	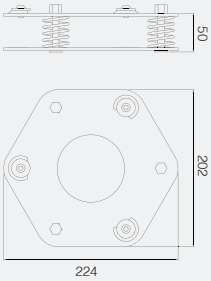	Column base with load springs

product	to be used with	dimensions (mm)	description / installation
ST CL A	2 beams LP4 Safety light Curtains	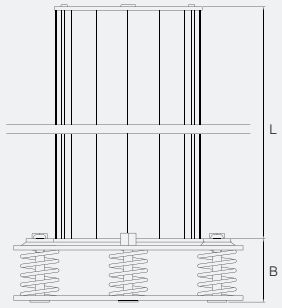	Column for LP 2 beams light curtain
ST CL B	3 beams LP4 Safety light Curtains		Column for LP 3 beams light curtain
ST CL C	4 beams LP4 Safety light Curtains		Column for LP 4 beams light curtain
ST CL 17	LP4 Safety light Curtains h ≤ 1,700 mm		Column for h=1,700 mm LP light curtains
ST CL 20	LP4 Safety light Curtains h ≤ 2,000 mm		Column for h=2,000 mm LP light curtains
ST CL AP	Safety light Curtains LP4 2 beams	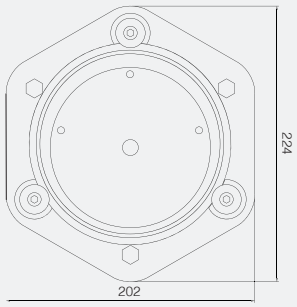	Column for 2 beams LP light curtains, with PG11 connection
ST CL BP	Safety light Curtains LP4 3 beams		Column for 3 beams LP light curtains, with PG11 connection
ST CL CP	Safety light Curtains LP4 4 beams		Column for 4 beams LP light Curtains, with PG11 connection
ST CL 17P	Safety light Curtains LP4 h ≤ 1,700 mm		Column for LP light curtains h =1,700 mm, with PG11 connection
ST CL 17P	Safety light Curtains LP4 h ≤ 1,700 mm		Column for LP light Curtains h = 2,000 mm, with PG11 connection

models	ST CL A / ST CL AP	ST CL B / ST CL BP	ST CL C / ST CL CP	ST CL 17 / ST CL 17P	ST CL 20 / ST CL 20P
QUOTE 'L' [mm]	1,000	1,200	1,330	1,700	1,970
QUOTE B' [mm]	55				

product	to be used with	dimensions (mm)	description / installation
ST AX	Safety light Curtains • LS2 • LS4 • LP4	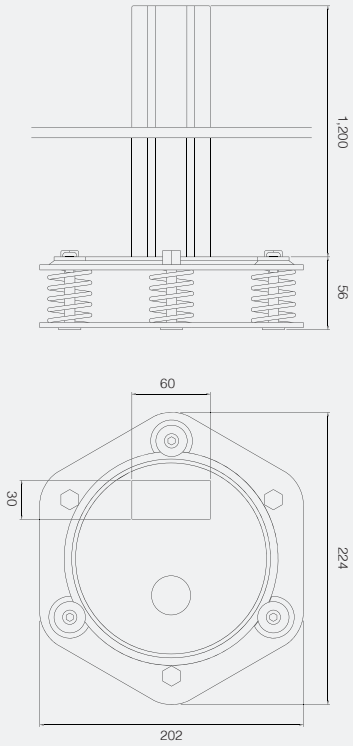	"Simple" Column for LP and LS light curtains

product	to be used with	dimensions (mm)	description / installation
ST CLS B	Safety light Curtains • LS2ER/0A • LS4 ER/0A • LS2ER/**-030(045)(060) • LS4ER/**-030(045)(060)		Column for LS 2 beams light Curtain
ST CLS C	Safety light Curtains • LS2ER/0B(0C) • LS4 ER/0B(0C) • LS2ER/**-075 (090)(105) • LS4ER/**-075 (090)(105)		Column for LS 3 and 4 beams light Curtain
ST CLS 17	Safety light Curtains • LS2ER/**-120 (135) • LS4ER/**-120 (135)		Column for LS h = 1,700 mm
ST CLS 20	Safety light Curtains • LS2ER/**-150 • LS4ER/**-150		Column for LS h = 2,000 mm
ST CLS BP	Safety light Curtains • LS2ER/0A • LS4 ER/0A • LS2ER/**- 030 (045)(060) • LS4ER/**- 030 (045)(060)		Column for LS 2 beams light Curtain, with PG11 connection
ST CLS CP	Safety light Curtains • LS2ER/0B(0C) • LS4 ER/0B(0C) • LS2ER/**- 075 (090)(105) • LS4ER/**- 075 (090)(105)		Column for LS 3 and 4 beams light Curtain, with PG11 connection
ST CLS 17P	Safety light Curtains • LS2ER/**- 120 (135) • LS4ER/**- 120 (135)		Column h=1,700 mm for LS light Curtain, with PG11 connection
ST CLS 20P	Safety light Curtains • LS2ER/**- 150 • LS4ER/**- 150		Column h=2,000 mm for LS light Curtain, with PG11 connection

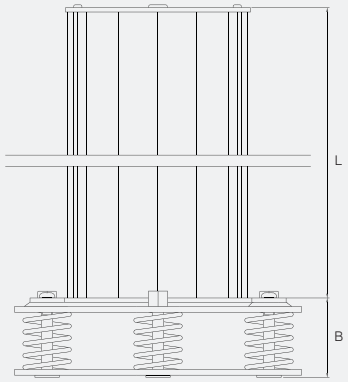

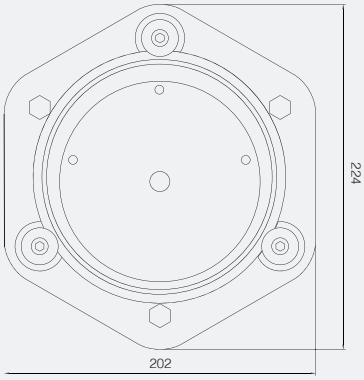

model	ST CLS B ST CLS BP	ST CLS C ST CLS CP	ST CLS 17 ST CLS 17P	ST CLS 20 ST CLS 20P
QUOTE 'L' [mm]	1,000	1,330	1,660	1,970
QUOTE B' [mm] with ST FLEX base	55			
QUOTE B' [mm] with ST FIX base	34			

deviating mirrors or columns with integrated mirrors

product	to be used with	dimensions (mm)	description / installation
SLA CL	Safety light Curtains • LS2 • LS4 • LP4		Column with mirrors for 2 beams safety light curtain
SLB CL			Column with mirrors for 3 beams safety light curtain
SLC CL			Column with mirrors for 4 beams safety light curtain
SL 17 CL			Column with mirrors h = 1,700 mm
SL 20 CL			Column with mirrors h = 2,000 mm

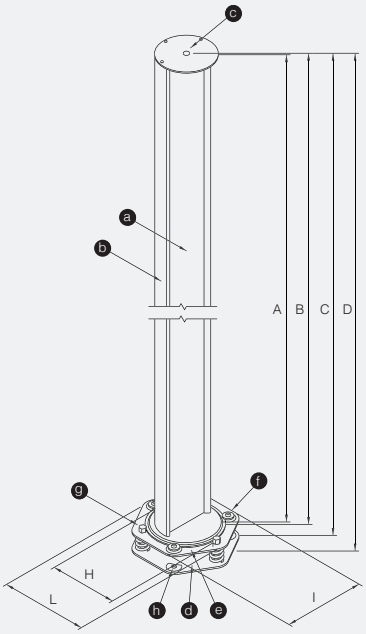

- A b profile height and corresponding a mirror height
- B Total SL X CL height (without ST FIX or ST FLEX base)
- C Total SL X CL height with ST FIX base
- D Total SL X CL height with ST FLEX base
- E Max ST FLEX height from floor (load springs height)
- F Max ST FIX height from floor (blocks height)
- G Upper plate thickness including level ball
- H SL X CL base diameter
- I ST FIX or ST FLEX amount of space
- L ST FIX or ST FLEX amount of space
- a Mirror
- b Column housing
- c
- d Lower fixing plate for ST FLEX base
- e Upper fixing plate for ST FLEX where to mount SL X CL column or ST FIX ground fixing plate
- f Column fixing screws and orientating reference rings
- g ST FLEX inclination adjusting nuts or ST FIX reference plane inclination adjusting double nuts
- h Floor fixing nuts place

model	QUOTE A [1]	QUOTE B [2]	QUOTE C [3]	QUOTE D [4]	application
SL A CL	1,000	1,016	1,036	1,066	2 beams perimetral protection
SL B CL	1,200	1,216	1,246	1,256	3 beams perimetral protection
SL C CL	1,330	1,346	1,366	1,386	4 beams perimetral protection
SL 17 CL	1,700	1,716	1,736	1,756	Perimetral protection with height up to 1,360 mm
SL 20 CL	1,970	1,986	2,006	2,026	Perimetral protection with height up to 1,660mm

[1] Housing or mirror height [2] Total column height without base
[3] Total height with ST FIX base [4] Total height with ST FLEX base

product	to be used with	dimensions (mm)	description / installation
SL 015	Safety light Curtains • LS2 • LS4 • LP4	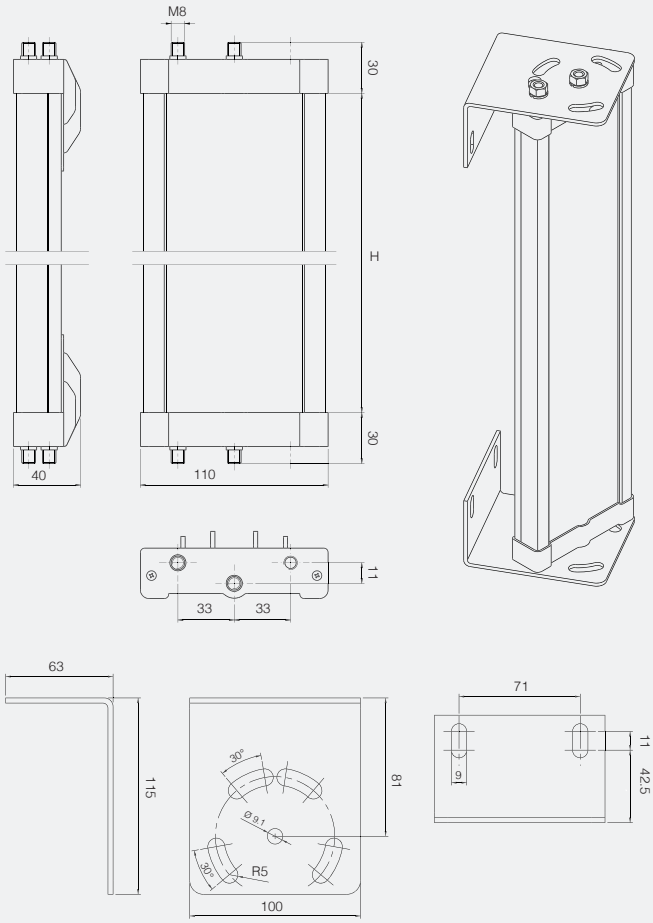	Mirror for 160 mm protected height
SL 030			Mirror for 310 mm protected height
SL 045			Mirror for 460 mm protected height
SL 060			Mirror for 610 mm protected height
SL 075			Mirror for 760 mm protected height
SL 090			Mirror for 910 mm protected height
SL 105			Mirror for 1,060 mm protected height
SL 120			Mirror for 1,210 mm protected height
SL 135			Mirror for 1,360 mm protected height
SL 150			Mirror for 1,510 mm protected height
SL 165			Mirror for 1,660 mm protected height
SL 180			Mirror for 1,810 mm protected height

model	mirror	Safety light Curtain	
	H	protected height	type
SL 015	250	160	light Curtain
SL 030	400	310	
SL 045	540	460	
SL 060	715	610	2 beams
SL 075	885	760	light Curtain
SL 090	1,060	910	3 beams
SL 105	1,230	1,060	4 beams
SL 120	1,400	1,210	light Curtain
SL 135	1,450	1,360	
SL 150	1,600	1,510	
SL 165	1,750	1,660	
SL 180	1,900	1,810	

laser pointer

STL 01 P			
product	to be used with	dimensions (mm)	description / installation
	Safety light Curtains • LP4	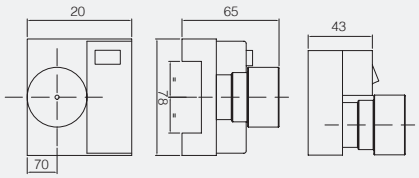	Laser pointer for LP safety light Curtain

STL 01 S			
product	to be used with	dimensions (mm)	description / installation
	Safety light Curtains • LS2 • LS4	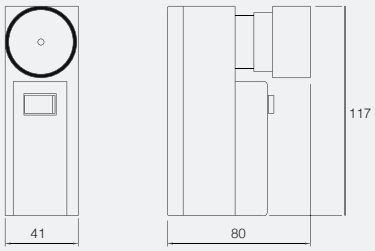	Laser pointer for LS safety light Curtain

box d'interconnessione

LP / BOX - 1			
product	to be used with	dimensions (mm)	description / installation
	Safety light Curtains • LP4ER_M • LP4PT	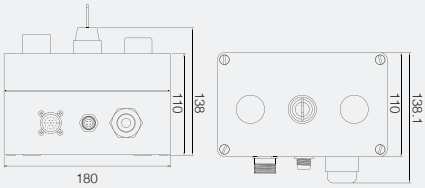	Control box: Start, Override, Muting Lamp, M12 and M23 connectors, 2 NO + 1 NC Relay

relay modules / safety modules

SB 300			
product	to be used with	dimensions (mm)	description / installation
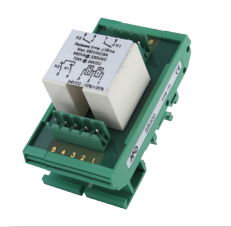	Safety light Curtains • LS2 • LS4 • LP4	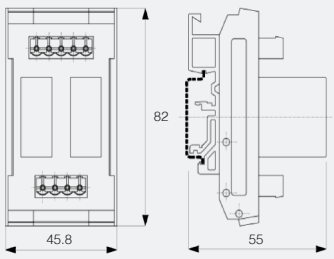	Force guided relay module

SB 400			
product	to be used with	dimensions (mm)	description / installation
	Safety light Curtains • LS2 • LS4 • LP4	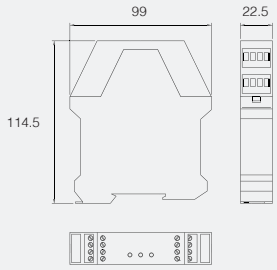	Cat. 4 Safety Module

SB 400M			
product	to be used with	dimensions (mm)	description / installation
	Safety light Curtains • LS2 • LS4	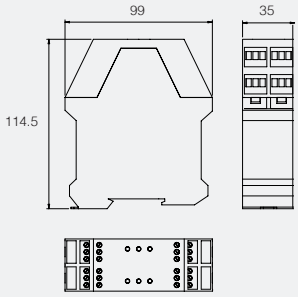	Cat. 4 Safety Module with integrated Muting function

SBCR03 and SH-IA/IC TH-IA/IC accessories series

STC 00			
product	to be used with	dimensions (mm)	description / installation
	RL110,116,113G reflectors	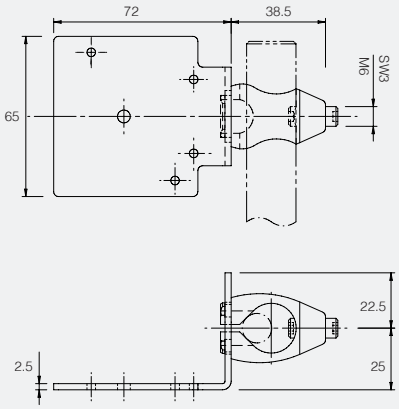	RL110,116,113G bracket for cylindrical rod

STC 18			
product	to be used with	dimensions (mm)	description / installation
	SH-IA/IC, TH-IA/IC safety photocells	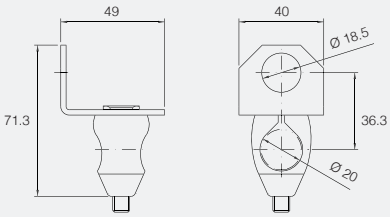	SH-IA/IC, TH-IA/IC bracket for cylindrical rod